High-Current CW RFQ's

G.E. McMichael
AECL Research, Chalk River Laboratories
Chalk River, Ontario, Canada, K0J 1J0

Abstract

Technical advances in high-current low-beta accelerators, attributable largely to work going on to develop a space-based neutral-particle-beam system, have spawned new or improved proposals for neutron sources, isotope production facilities and other high-power accelerator applications. Over the past ten years, the Radiofrequency Quadrupole (RFQ) accelerator has come of age, supplanting the 0.5-1 MV dc injectors that used to be common to drift-tube linacs and easing the requirements on the first DTL tank. The possibilities of the RFQ, combined with recently demonstrated beamline funnels for combining beams, open up a new range of frequency/current parameter space to accelerator designers. Requirements being placed on RFQ's for high-current high-duty-factor applications are discussed and compared with achievements to date. An overview of new cw RFQ accelerators and proposals is included.

I. INTRODUCTION

The development and spread of RFQ's in the accelerator community has been well chronicled in review papers at previous Particle and Linear Accelerator Conferences [1-6]. The variety of RFQ accelerators is very great, covering: a range of ion masses from hydrogen to uranium, operating frequencies from <15 to >400 MHz, duty factors from $<0.1\%$ to 100%, and geometries (or rf envelopes) with four-fold to two-fold symmetry (symmetric four-vane, four-rod, split coax or double H). This paper will concentrate on a small subset, those RFQ's proposed or built to accelerate high-current high-duty-factor hydrogen or deuterium ion beams.

There have been proposals for very high current cw RFQ's, for example as an injector for a 300 mA cw spallation breeder accelerator [7] or as 0.5 - 2 A current drivers for fusion reactors [8]. However, maximum cw current accelerated in an RFQ to date [9] is just under 80 mA, and except for fusion applications it appears that beam funneling may provide a preferable route for currents much over 100 mA [10]. The physics issues of transporting and accelerating high-current, high-brightness beams have received a lot of attention [11]. This effort has paid off; RFQ's can now efficiently capture and accelerate, with minimal beam loss or brightness degradation, the best beams the ion sources can produce.

Engineering issues of high duty factor are also being addressed, and good progress has been made in areas like 3-D thermal and stress analysis. However, unlike the beam issues where predictions can be verified on the many existing low duty factor accelerators, engineering proof-of-principle experiments need expensive and long-lead cw facilities, and to date there have been few of these. Experience gained from previous cw experiments, new requirements, and the status and plans for new facilities, will be reviewed in this paper.

II. LOS ALAMOS (USA)

A. FMIT

The first cw RFQ was built at Los Alamos as a prototype injector for a proposed Fusion Materials Irradiation Test (FMIT) facility, a 35 MeV, 100 mA deuteron linac for materials studies for fusion reactors. To avoid activation problems, all beam testing with the prototype was done with H_2^+ ions. Poor vacuum near the RFQ entrance stripped a large fraction of the H_2^+ ions to H^+ and neutral atomic hydrogen. This stripping, along with a severe mismatch caused by the magnetic end wall of the RFQ, limited the peak current to about 50 mA, approximately half the 100 mA of H_2^+ that could be extracted from the bucket (multi-cusp) ion source. Further stripping within the RFQ produced H^+ wings on the output beam that exceeded the acceptance of the output beam line, resulting in excessive heating of beamline components and eventual vacuum leaks.

Experience with commissioning and operating the FMIT RFQ was reported at the time [12,13]. It was the first cw RFQ and it showed accelerator physicists a number of things [14] that, six years later, continue to influence cw thinking. These include:

- CW operation is much more difficult than pulsed operation. When first beam was attempted, good pulsed beam operation was achieved in two weeks, but it then took nearly two years to obtain cw operation.
- 3-D design codes are essential. Only 2-D codes were available to FMIT designers, so no allowance was made for the 5 times increase of magnetic field line density near the ends of the vanes. The resulting 25 times increase in power density completely melted the rather robust solid copper tuning straps.
- An external rf manifold is an effective means of coupling rf power into the core tank, but adds cost and complexity, impedes maintenance, accounts for a significant ($\leq 20\%$) fraction of the ohmic rf power losses, and may cause difficulties with multipactoring.

0-7803-0135-8/91$01.00 ©IEEE

B. GTA

Although not expected to operate cw, the Ground Test Accelerator (GTA) RFQ is having a very strong influence on cw RFQ development. GTA is one of the cryogenically-cooled (20-35 K) accelerators being developed for the Strategic Defense Initiative (SDI), Neutral Particle Beam (NPB) program, as ground-based tests of accelerator concepts and components suitable for a space platform. It is cooled with 20 K gaseous He, which limits its duty factor to about 2% [15]. However, the "simple" substitution of liquid hydrogen as the cooling fluid would provide adequate cooling for cw operation. Of more importance to cw development, however, is that GTA is designed with peak fields suitable for cw (1.8 Kilpatrick [16] instead of the more than 2.5 Kilpatrick of most pulsed RFQ's) and is being used to verify many of the physics concepts for the next generation of cw RFQ's. It will also be the first "funneled" low-beta linac. Recent experiments on a single-leg 5 MeV H^- funnel at Los Alamos [17] have confirmed the beam dynamics predictions that two low-energy, high-brightness beams can be combined without significant loss or phase space degradation.

C. ATW, IFMIF

Completed conceptual designs for two new cw accelerators have been developed at Los Alamos: ATW, an Accelerator for Transmutation of Waste [18], and IFMIF, an International Fusion Materials Irradiation Facility [19]. Each borrows heavily on ideas being proven on GTA, and each will require at least 2 RFQ's and one or more stages of funneling.

III. CHALK RIVER (CANADA)

A. RFQ1-600

A cw RFQ has been operating at Chalk River since 1988 and has accelerated almost 80 mA of protons to 0.6 keV [9]. It was previously referred to as RFQ1, but has now been renamed RFQ1-600 to distinguish it from its successor, RFQ1-1250, described below. A cutaway of this RFQ accelerator is shown in Figure 1. Designed in the early 1980's and following FMIT's lead, the RFQ1-600 tank and vanes are copper-electroplated mild-steel weldments, but unlike FMIT, the vane tips are solid OFHC copper. Primarily because of the higher frequency, surface power densities are a factor of 4 or 5 higher than in FMIT. Although the peak electric fields are also higher (25 MV/m versus 18 MV/m), the Kilpatrick factor is somewhat lower.

An extensive experimental program with RFQ1-600 has been recently completed [9]. The beam-parameter space of the RFQ was mapped and numerous concepts from low duty factor RFQ's (vane coupling rings, movable slug tuners, etc.) have been "proven" for cw applications [20].

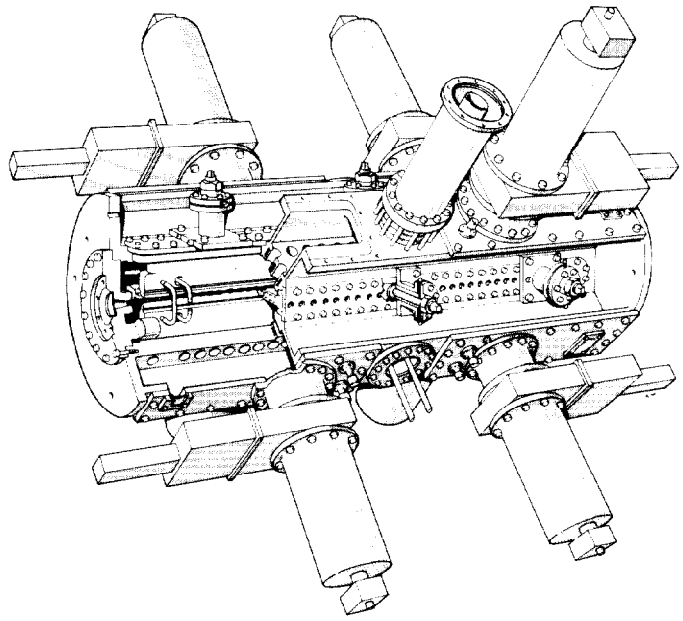

Figure 1. Cutaway drawing of the RFQ1-600 RFQ.

B. RFQ1-1250

Better RFQ design recipes (many formulated at Los Alamos) and confidence that higher electric fields can be maintained in cw structures have made it possible to design new vanes to fit within the original RFQ1-600 tank that will increase the output energy to 1.25 MeV. The new vanes [21] are made from alumina dispersion-strengthened copper, a high-strength, high-conductivity copper alloy, and are now being installed. RFQ1-1250 is designed to operate with peak electric fields of 30 MV/m (1.8 Kilpatrick at 267 MHz). It has, however, a smaller bore, so the intervane voltage and surface power densities should be the same as RFQ1-600.

IV. GRUMMAN/ARGONNE (USA)

A. CWDD

The next cw RFQ expected to come on line after RFQ1-1250 is the Continuous-Wave Deuterium Demonstrator (CWDD), another of the cryogenically-cooled ground-based accelerators being built to test components and concepts for the SDI NPB program. The CWDD test program will pursue four objectives: cw operation, deuterium (D^-) beams, operation at cryogenic temperatures, and higher beam brightness. The CWDD accelerator includes a D^- ion source, RFQ and the initial stages of a drift-tube linear accelerator. It was designed and is being built by Grumman at their Bethpage NY site, and will then be set up and operated at the Argonne National Laboratory. Culham Laboratories are a major subcontractor for the injector, diagnostics and controls. Los Alamos assisted with design, prototyping and cold-model testing. A full-scale cold-model of the RFQ was built and

used to prove the stability of such a long structure using only end tuners. Figure 2 shows the conceptual layout of the entire accelerator. Fabrication of the RFQ is well advanced, with testing scheduled to begin in 1992. It is a four-section copper-alloy electroformed structure (employing the electroformed assembly methods pioneered for the single-section, 1 m long BEAR accelerator [22]). Cooling will be done with supercritical neon, which gives very similar isotherms to those expected from liquid hydrogen cooling. Each section is approximately 1 m long. The sections, when bolted together, will form a 4 m (4.66 λ) long rf chamber, the longest (length as a number of wavelengths) RFQ to date. The electroforming assembly method makes possible the very precise vane alignment that such an ℓ/λ ratio requires. The cryostat tank, in which this assembly mounts, provides the vacuum enclosure.

Figure 3 is a picture of the first 1 m section, prior to electroforming. At room temperature, 640 kW of rf power would be required to excite the structure to a vane tip peak field of 33 MV/m (1.8 Kilpatrick at 352 MHz). However, at the normal operating temperature of 35 K, the Q enhancement is at least a factor of 4, which reduces the structure power to less than 160 kW [23]. The Valvo YK1350 klystron used to power this structure can provide up to 1 MW cw at 352 MHz. To keep the power per drive loop to manageable levels, output of the klystron will be split in four and fed to separate drive loops, two to each side of the RFQ. Assembly and tuning of the RFQ at Grumman is now underway, with delivery to Argonne and first cw beam scheduled for 1992.

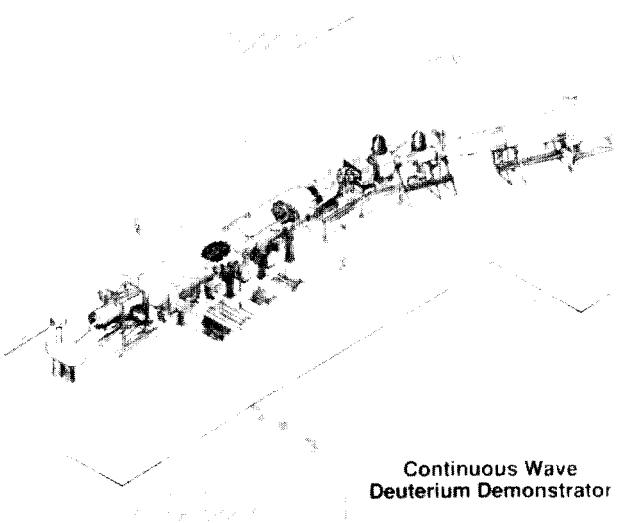

Figure 2. Conceptual drawing of the CWDD cw deuteron accelerator. From left: dc injector, RFQ, DTL, HEBT, beam stop.

V. Japan Atomic Energy Res. Inst. (Japan)

A. BTA

At JAERI, work is underway on the conceptual design and specifications for a Basic Technology Accelerator (BTA).

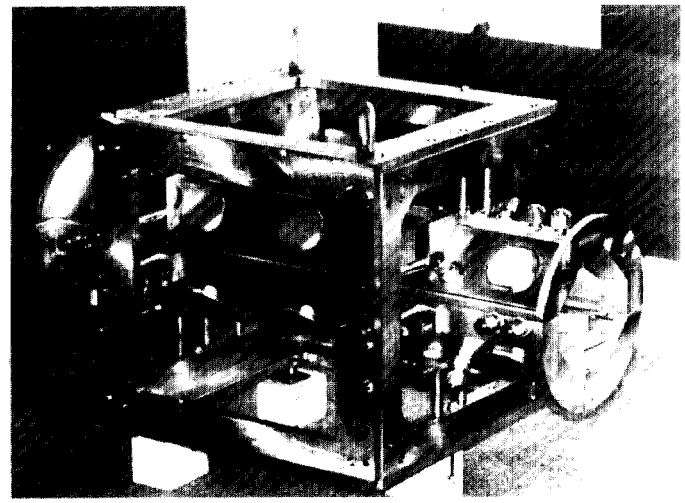

Figure 3. First of 4 sections of the CWDD cw RFQ prior to electroforming. Details of the vane cutback can be seen.

Although planned to operate at only 10 mA cw, both the RFQ and DTL are being designed with a 100 mA cw current limit [24]. BTA is seen as the first step in the development of a high-energy cw proton linac for actinide transmutation, the Engineering Test Accelerator (ETA), a proposed 1.5 GeV, 10 mA cw proton linac [25,26].

VI. Inst. for Theor. & Exp. Physics (USSR)

A. ITEP-a, ITEP-b

Work is also underway at ITEP on conceptual designs for high-energy linear accelerators to transmute nuclear wastes. Both proton and deuteron accelerators are being considered [27]. The deuteron proposal (which I will refer to as ITEP-a) would funnel the beams from 4 cw RFQ's operating at 75 MHz, each of which would provide 250 mA of deuterons at 6 MeV. The resulting 1 A beam would be accelerated to between 50 and 150 MeV before being directed to a lithium target. The high-energy proton linac proposal (ITEP-b) would also start with 75 MHz cw RFQ's, but these would accelerate 150 mA of protons from 0.1 to 3.5 MeV. Two RFQ's would be required, with a single funnel to give a 300 mA beam that would then be accelerated to 1.5 GeV.

VII. Summary

The neutral particle beam program for the US Strategic Defense Initiative has funded much of the recent activity in cw RFQ's (as well as the pulsed RFQ work on GTA and ATS at Los Alamos). This program has placed an emphasis on high-brightness, intense cw beams, and on light-weight, small, cryo-cooled accelerator structures. Cryo-cooling does not appear advantageous for ground-based systems. However, the other advances from this program are being applied to other

Table 1
Parameters for some past and future high-current cw RFQ's

PROJECT	FREQ	ION	I_{out}	E_{in}	E_{out}	FIELD	LENGTH	STATUS
	MHz		mA	MeV	MeV	Kilpat.	λ	(cw beam)
FMIT[a]	80	H_2^+	100	0.075	2.0	1.7	1.03	1985
RFQ1-600[b]	267	H^+	75	0.05	0.6	1.5	1.31	1988
GTA[c]	425	H^-	50	0.035	2.5	1.8	3.98	1990[d]
RFQ1-1250	267	H^+	75	0.05	1.25	1.8	1.31	1991
CWDD	352	D^-		0.2	2.0	1.8	4.66	1992
ATW	350	H^+	125	0.1	2.5	1.8	3.97	proposal
BTA	201	H^+	100	0.1	2.0	1.8	2.24	design
IFMIF	175	D^+	125	0.1	3.0	1.8	3.15	proposal
ITEP-a	75	D^+	250	0.1	6.0		2.5	proposal
ITEP-b	75	H^+	150	0.1	3.5	>1.4	2.0	proposal

(a) Designed to accelerate 100 mA of D^+, only operated with H_2^+ and current was limited to 50 mA by injector problems and beam stripping.
(b) Previously referred to as RFQ1.
(c) "CW Traceable". Designed with cooling and peak fields suitable for cw, but will only be operated at 2% duty factor.
(d) Pulsed (low duty factor).

applications, such as neutron production accelerators, giving beam intensity and brightness within about a factor of two of those achievable with short-pulse machines.

Specifications of high-current (>50 mA) RFQ's that have either already operated or are presently being built are given in Table 1. Also included, as examples of what RFQ designers are now proposing, are some new cw RFQ's that are at the detail or conceptual design stage. As already discussed, most of the new RFQ proposals are for currents in the range of 50 to 150 mA; funneling of two or more such beams is planned if higher currents are wanted. GTA has provided first verification of the new, more efficient design recipes, and cw demonstrations should be available soon on RFQ1-1250 and CWDD.

VIII. ACKNOWLEDGEMENTS

I have been helped by the many people who provided information for this paper. Particular thanks to R. Hardekopf, K. Johnson, N. Lazarev, M. Mizumoto, J. Rathke, O. Sander, D. Schneider and J. Stovall.

IX. REFERENCES

[1] H. Klein, "Development of the Different RFQ Accelerating Structures and Operating Experience," IEEE NS-30, No. 4, pp. 3313, 1983.

[2] I.M. Kapchinskiy, "History of RFQ development," Proc. 1984 Lin. Accel. Conf., GSI-84-11, pp. 43, 1984.

[3] S.O. Schriber, "Present Status of RFQ's," IEEE NS-32, No. 5, pp. 3134, 1985.

[4] J. Staples, "RFQ's in Research and Industry," Proc. 1986 Lin. Accel. Conf., SLAC-303, pp. 227, 1986.

[5] R.A. Jameson, "High-Brightness H^- Accelerators," Proc. 1987 IEEE Part. Accel. Conf, IEEE 87CH2387-9, pp 903, 1987.

[6] A. Schempp, "Recent Progress in RFQs," Proc. 1988 Lin. Accel. Conf, CEBAF-Rep.-89-001, pp. 460, 1989.

[7] S.O. Schriber, "The ZEBRA Project - Past and Present," Proc. 1984 Lin. Accel. Conf., GSI-84-11, pp. 43, 1984.

[8] W.R. Becraft, J.H. Whealton, T.P. Wangler, A. Schempp, G.E. McMichael, M.A. Ackerman, G.C. Barber, W.R. Dagenhart, H.H. Haselton, R.J. Reardon, K.E. Rothe, P.M. Ryan, B.D. Murphy and W.L. Stirling, "High Energy (1-2 MeV) Beams for Magnetic Fusion - Tokamak Plasma Heating and Current Drive," Proc. 1988 Lin. Accel. Conf, CEBAF-Rep.-89-001, pp. 149, 1989.

[9] G.M. Arbique, B.G. Chidley, W.L. Michel, G.E. McMichael and J.Y. Sheikh, "Beam Transmission and Emittance Measurements on the RFQ1 Accelerator," these proceedings.

[10] T.P. Wangler, G.P. Lawrence, T.S. Bhatia, J.H. Billen, K.C.D. Chan, R.W. Garnett, F.W. Guy, D. Liska, S. Nath, G.H. Neuschaefer and M. Shubaly, "Linear Accelerator for Production of Tritium: Physics Design Challenges," Proc. 1990 Lin. Accel. Conf., LANL report LA-12004-C, pp. 548, 1991.
[11] T.P. Wangler, "Physics Design of Linear Accelerators for Intense Ion Beams," Proc. 1988 Lin. Accel. Conf, CEBAF-Rep.-89-001, pp. 211, 1989.
[12] J.D. King, "Mechanical Considerations in CW Linacs," IEEE NS-32, No. 5, pp. 2730, 1985.
[13] M.V. Fazio and F.E. Brandeberry, "CW RF Operation of the FMIT RFQ," IEEE NS-32, No. 5, pp. 2840, 1985.
[14] J. D. Schneider, LANL, private communication, 1991.
[15] W. Fox, "The Pros and Cons of Cryogenic Accelerators: an Engineering Point of View," Proc. 1990 Lin. Accel. Conf., LANL report LA-12004-C, pp. 515, 1991.
[16] W.D. Kilpatrick, "Criterion for Vacuum Sparking Designed to Include Both RF and DC," Rev. Sci. Instr., 28, No. 10, pp. 824, 1957.
[17] K.F. Johnson, O.R. Sander, G.O. Bolme, J.D. Gilpatrick, F.W. Guy, J.H. Marquardt, K. Saadatmand, D. Sandoval, and V. Yuan, "A Beam Funneling Demonstration: Experiment and Simulation," Proc. Int. Symp. on Heavy Ion Inertial Fusion, Monterey, CA, 1990 December 3-7, to be published.
[18] G.P. Lawrence, "New Applications for High-Power Proton Linacs," Proc. 1990 Lin. Accel. Conf., LANL report LA-12004-C, pp. 553, 1991.
[19] G.P. Lawrence, et al., "A High Performance D. Lithium Neutron Source for Fusion Technology Testing: Accelerator Driver Design," Fusion Technology, 15(21), pp. 289, 1989.
[20] T. Tran-Ngoc, G.E. McMichael, G.M. Arbique and F.P. Adams, "Components for CW RFQ's," Proc. 1990 Lin. Accel. Conf., LANL report LA-12004-C, pp. 48, 1991.
[21] B.G. Chidley, G.E. McMichael and T. Tran-Ngoc, "New Vanes for RFQ1: Fabrication, Tuning and End-Effect Calculations", these proceedings.
[22] D. Schrage, L.Young, B. Campbell, J.H. Billen, J. Stovall, F. Martinez, W. Clark, G. Bohme, S. Gibbs, D. King, P.G. O'Shea, T. Butler, J, Rathke, R. Micich, J. Rose, R. Richter and G. Rosato, "Beam Experiment Aboard Rocket RFQ," Nuc. Instr. & Meth. B40/41, pp. 949, 1989.
[23] J. Rathke, Grumman, private communication, 1991.
[24] M. Mizumoto, JAERI, private communication, 1991.
[25] Y. Kaneko, "The Intense Proton Accelerator Program," 2nd Int. Symp. on Advanced Nuc. Energy Res., Mito, pp. 25, 1990.
[26] M. Mizumoto et al., "Development Plan of Basic Technology for a High Intensity Proton Linear Accelerator," ibid, pp. 219.
[27] P.P. Blagovolin, I.V. Chuvilo, I.M. Kapchinskiy and N.V. Lazarev, "High Current Ion Linacs for Transmutation of Long-lived Wastes," Proc. 1990 Lin. Accel. Conf., LANL report LA-12004-C, pp. 778, 1991.