© 1987 IEEE. Personal use of this material is permitted. However, permission to reprint/republish this material for advertising or promotional purposes or for creating new collective works for resale or redistribution to servers or lists, or to reuse any copyrighted component of this work in other works must be obtained from the IEEE.

Bucket Matching System between TRISTAN AR and MR

J. Urakawa, H. Hayano, T. Kawamoto, and M. Kikuchi
National Laboratory for High Energy Physics (KEK)
Oho-machi, Tsukuba-gun, Ibaraki-ken, 305 Japan

Introduction

TRISTAN accelerator complex consists of three accelerators : a 2.5 GeV linac , an 8 GeV accumulation ring (AR) and a 30 GeV main ring (MR). The TRISTAN AR is a beam accumulator and energy booster for the TRISTAN MR. In physics run, AR is operated in a single bunch mode, in which only one of the 508 MHz RF buckets is filled with 1.5 ns pulsed beam from the linac.[1] After acceleration to 7 GeV in AR, the beam is injected into MR. The TRISTAN MR ,which is eight times longer than AR in its circumference, has four beam interaction points for high energy physics experiments. The MR is designed to store electrons and positrons in two 508 MHz RF buckets equally spaced, respectively. In ordinary operation, the positrons are first injected to MR and next the electrons. The positron injection is repeated four times and next the electrons twice. Each bunch current amounts to about 1 to 2 mA in MR.

It is important to inject bunched beams into MR so as to satisfy the timing condition for colliding in physics run. Furthermore, it is also important to supply trigger timing signals for the beam transfer system , bunch currents monitor system , tune measurements and RF damper system. In this paper we describe a timing system of beam transfer from AR to MR concentrating on how to make a timing condition for colliding. In the timing system, two synthesized signal generators (synthesizers) are used as master oscillators for AR and MR. This gives a flexibility to the operation of AR; one can use AR in various mode such as a storage ring for synchrotron radiation research and an electron-positron collider while MR is operating in colliding mode. These two synthesizers are necessary to synchronization between RF buckets of AR and MR within an accuracy of ±100 ps(±18° in RF phase). This high accuracy make it possible to transfer a bunch in AR into a single bucket of MR. The synchronization (bucket matching) system consists of two RF synthesizers mentioned above, phase locked loop (PLL) circuit between them and the bucket matching controller CAMAC module(BMC). The AR synthesizer is controlled through CAMAC system in order to set the frequency difference(Δf) between the AR RF and MR RF in following to the time sequence produced by BMC. Then the AR bucket phase slips with respect to that of MR until the bucket matching signal ,which is produced when a time coincidence occurs between the buckets of AR and MR, resets the Δf to zero. The coincidence is detected within the accuracy of ±400 ps(±72°) by the BMC. Finally, as PLL is switched on by the bucket matching signal, the accuracy of the bucket matching is within ±6 ps(±1°) .

In the following section, we describe the outline of this system. Next the main parts of it are explained. Then, the total accuracy is discussed. Finally, we will comment on the problem of the present system and a improvement plan.

General description of this system

A schematic diagram of this system is shown in Fig.1. Each device is controlled through CAMAC modules by a highly computerized control system.[2]

The MR has 5120 RF buckets and the AR 640 at intervals of about 2 ns, respectively. Frequency divider divides MR RF by 5120 to give the MR revolution frequency which gives the reference of RF buckets of MR. We call it the bucket address "#0". A symmetrical bucket of "#0" is named as "#2560". The revolution signal of MR that corresponds to the other bucket address is generated from address "#0" using digital delay CAMAC modules (TD-2)[3]. In AR, positrons or electrons are injected to the fixed buckets of the

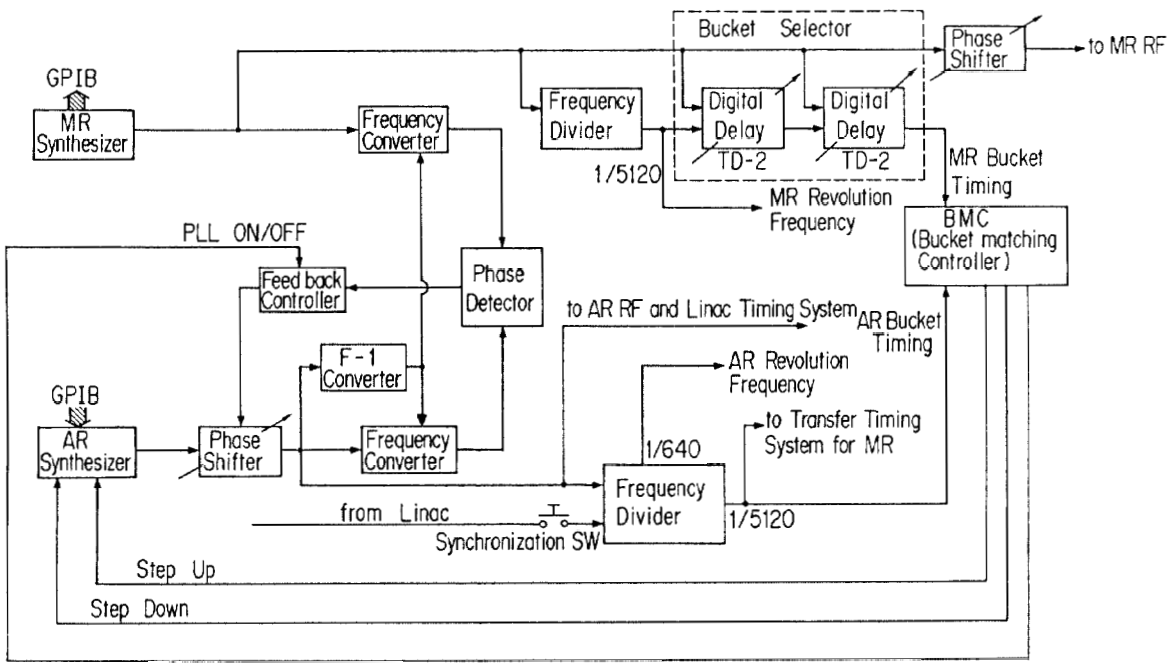

Fig.1 A schematic diagram of the bucket matching system between the TRISTAN AR and MR

640 RF buckets ,respectively. One eighth of AR revolution signal generated from the AR RF by the 1/5120 frequency divider gives the reference to the AR bunched beam. Then the problem reduces to take matching of the beam reference signal of AR and the revolution signal corresponding to an arbitrarily selected bucket of MR. This is done by the process described in next paragraph. The RF phase angle to the injected beams is adjusted by the phase shifter which is located after the MR RF generator. The MR revolution frequency is distributed in the MR area for diagnostic measurement of the beam.

The time chart of the control sequence produced by BMC is shown in Fig.2. BMC produces the time sequence to control the AR synthesizer and PLL. At the first step, PLL switch is set off by the signal from BMC. The AR RF is stepped up/down by a frequency Δf with respect to MR RF. Then the relative phase of AR beam with respect to the selected bucket of MR slips until their coincidence occurs. The BMC detects the coincidence and AR RF is stepped down/up. AT this stage, the AR bucket is synchronized with the selected bucket by BMC within an accuracy of ±400 ps. Finally, the AR bucket is matched with the MR selected bucket by PLL on. The frequency difference (Δf) is presetted to the AR synthesizer through GPIB by a μ-computer CAMAC module.[4]

Using this bucket matching system , positron or electron bunched beam in AR is synchronized with an arbitrary bucket of 5120 buckets in MR within an accuracy less than 1° in MR RF phase. After synchronization is performed, AR extraction and MR injection trigger timing signals are produced by the trigger system, which is not described here, based on AR revolution frequency/8.

All the functions mentioned above are controlled remotely from the touch-panel at the control room through the computers and CAMAC system.

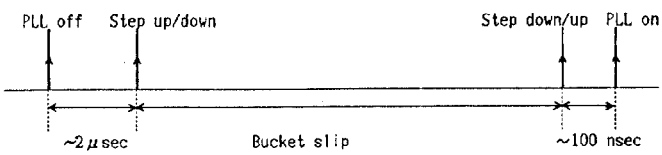

Fig.2 The time chart of the control sequence produced by BMC

Description of the main parts

Two synthesizers and PLL circuit

The MR synthesizer has a standard oscillator 10 MHz with the stability less than 10^{-8}/day. The AR synthesizer is same type as MR one. The AR synthesizer uses the above 10 MHz standard oscillator as the external clock. Therefore, if the output frequency of the AR synthesizer is equal to MR one, the phase between the AR RF and the MR RF doesn't almost slip. The step up/down signal goes in TTL controller inputs of the AR synthesizer and increases/decreases the AR RF. Feedback controller has the gate input which is used to open/close the feedback loop. The PLL circuit is conventinal one. It locks the phase within 1°. When the frequency of the AR is shifted from MR one, PLL is switched off through the BMC.

Bucket Selector

The MR revolution frequency is the reference signal of the synchronization. This bucket selector consists of two 550 MHz digital delay CAMAC modules (TD-2).[3] Since the clock of TD-2 is MR RF, delay time is changed in a bucket unit. The delayed revolution frequency is generated and the MR injection bucket is arbitrarily selected by setting the preset counter.

BMC

Fig.3 shows a simplified block diagram of BMC. The MR and AR bucket timing signal are converted by discriminators into the signals of about 30 ns pulse-width. The jitter of the output signals to the RF is less than 100 ps. The rise and fall time are less than 1 ns. When the bucket matching (BM) start pulse goes out through the CAMAC system , step up/down TTL signal is supplied to the AR synthesizer . In order to receive the coincidence signal, gate circuits are opened after about 50 ms from BM start. Monostable multivibrator becomes active with the input pulse more than nearly 28 ±0.2 ns in width. Using this characteristics, when the AR bucket timing signal is coincident with the MR bucket timing signal, BM stop signal is generated within an accuracy less than 200 ps. This signal closes the coincidence gates and supplies step down/up TTL signal to the AR synthesizer. Finally, PLL becomes the on state.

Operation Software for this system

A program which executes bucket matching is called by the real-time task. The real-time task is activated through an event LAM CAMAC module by event signals on global timing signals.[5] This task is activated every time at the acceralation stage of AR before the beam injects to the MR. The program executes the bucket matching by following three steps. At first, the AR RF is stepped up by Δf=2 kHz, the AR RF bucket phase advances relatively to the MR RF bucket. In this step, the AR RF bucket has one-turn time of 2.56 s about the MR one. Since the AR synthesizer needs about 20 ms to receive the stop signal, the AR bucket overruns about 40 buckets. At the second step, the AR RF is stepped down by Δf=400 Hz , the AR RF bucket phase is delayed relatively to the MR RF bucket and the stop signal goes out after about 100 ms. The AR bucket inversely overruns about 8 buckets. Finally, the AR RF is

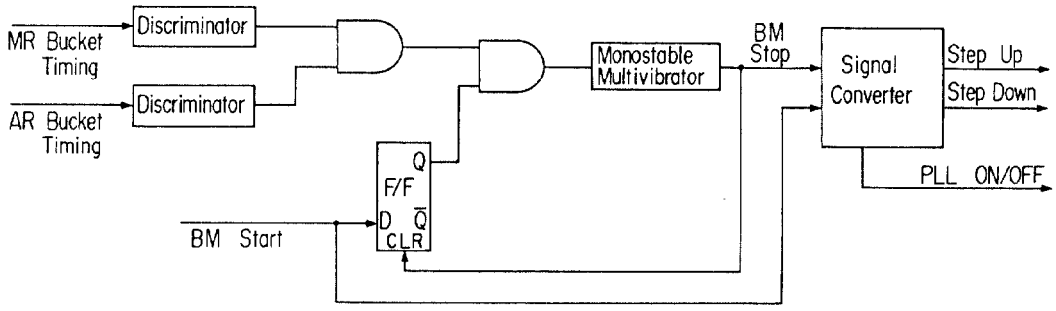

Fig.3 A simplified block diagram of BMC

stepped up by Δf=10 Hz, its bucket phase advances. In this step, the stop signal goes out after about 800 ms. The overrun time of this step is less than 200 psec. Then, the AR bucket is matched with the MR bucket. The execution time of this task is less than 5 s.

Various injection modes in addition to colliding mode are prepared; for example, multibunch injection and random injection modes for the baking of the vacuum chamber and the machine study.

The total precision of the present system

We investigated the influence of the present system to the AR beam in the case of single bunched beam. A frequency jump less than 5 kHz (=Δf) gave no influence the beam of 20 mA. However, the frequency jump more than 6 kHz resulted in the beam loss sometimes. Switching the PLL on/off with the phase difference of about 180° between the MR RF and the AR RF, the beam loss did not occure. This shows that the responce time of PLL circuit is enough long to the period of the synchrotron oscillation of AR. When the AR synthesizer receives the step up/down TTL signal, the AR RF is changed by Δf after about 20 ms. The needed time for one turn of the AR bucket with respect to the MR bucket is about 5120/Δf sec. The more Δf increases, the more error arises from the ambiguity of the reception time of Δf control TTL signal which comes from the interruptive process of the synthesizer. Therefore, the precision of this system was measured more than 1000 times for each Δf. Setting arbitrary value to the bucket selector , time differences between the AR revolution/8 and MR revolution were measured using TDC with the resolution of 50 ps/bit. From these data, phase width σ_{10}, in which 90% data are included, were obtained. The results are shown in Fig.4. The precision without PLL circuit is less than 60° in σ_{10} in the case of $\Delta f \leq 10$ Hz. After PLL is switched on, the system is accurate within ±1° in RF phase.

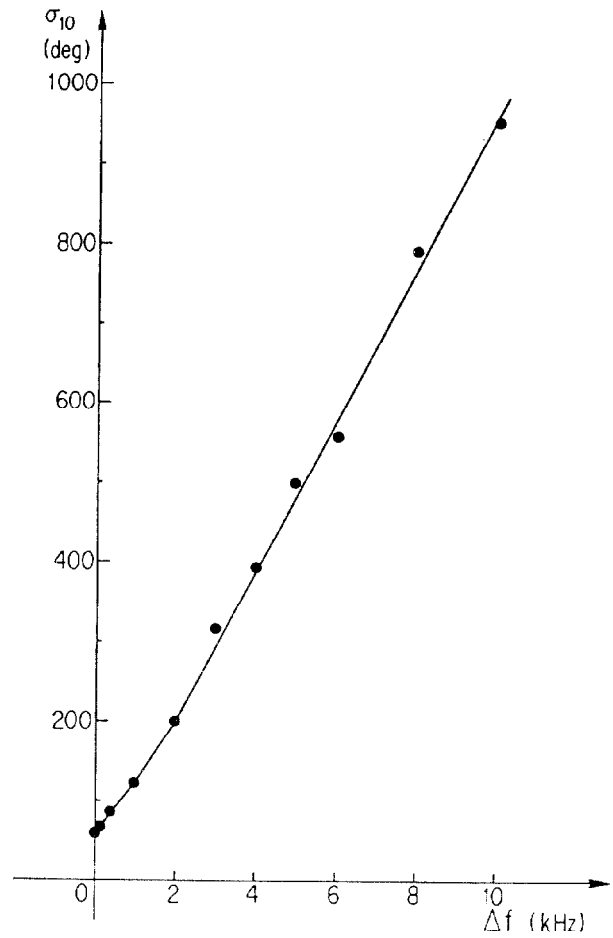

Fig.4 Phase setting precision without PLL circuit

Brief discussion about the problem of the system and the improvement

A change of several nsec of the linac gun trigger timing can cause the change of colliding position in MR which may be a weak point in the present system. A button electrode of the AR position monitor is used to pick up a bunch signal. The AR bunched beam timing signal produced from the bunch signal has the jitter less than 300 ps. Therefore, we can use this signal as the beam reference signal instead of AR revolution signal. In this modified case shown in Fig.5, the AR bunched beam timing signal is synchronized with the MR delayed revolution frequency. Futhermore, the AR extraction trigger and the MR injection trigger are generated from the MR delayed revolution frequency. In this case, if the AR injection bucket is changed, the MR injection bucket is automatically setted to satisfy all conditions.

Conclusion

Both bucket selection and phase adjustment between AR and MR for the MR beam injection are automatically executed by the bucket matching system. The accuracy of this system is less than ±1°(±6 ps).

This system has successfully supplies so far trigger signals to the MR transfer timing system, monitor system and so on ,during the last about half year. Since the AR injection bucket is not changed as long as the linac timing system or the AR timing system is not changed, at present this system has no problem without the improvement mentioned above.

References

[1]K.Ishii et al., "BEAM SYNCHRONIZATION FOR TRISTAN AR", Proc. 5th Symposium on Accelerator and Technology (KEK,1984), p.329.

[2]S.Kurokawa et al., Nucl. Instr. and Meth. A247, 29(1986)

[3]K.Ishii,"Digital delay CAMAC module with 550MHz preset counter (TD-2)", KEK-83-14 (1983).

[4]K.Uchino, et al., "INTERFACE SYSTEM OF TRISTAN ACCELERATOR", Proc. 5th Symposium on Accelerator and Technology(KEK,1984), p.335.

[5]E.Kadokura, et al., "TIMING CONTROL FOR TRISTAN", Proc. 4th Symposium on Accelerator and Technology(Saitama,1982), p361.

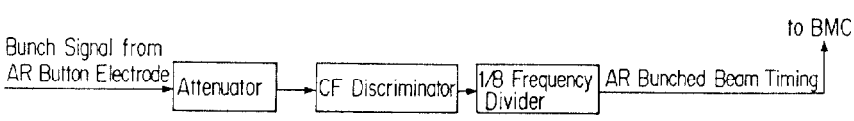

Fig.5 A schematic diagram for the modification of the bucket matching system