IEEE Transactions on Nuclear Science, Vol. NS-32, No. 5, October 1985

RF CAVITIES WITH TRANSVERSELY BIASED FERRITE TUNING

W. R. Smythe and T. G. Brophy
Nuclear Physics Laboratory, University of Colorado
Boulder, CO 80309
R. D. Carlini, C. C. Friedrichs, D. L. Grisham, G. Spalek, and L. C. Wilkerson
Los Alamos National Laboratory, Los Alamos, NM 87545

Abstract

Earley et al.[1] suggested that ferrite tuned rf cavities have lower ferrite power dissipation if the ferrite bias field is perpendicular rather than parallel to the rf magnetic field. A 50-84 MHz cavity has been constructed in which ferrite can be biased either way. Low power measurements of six microwave ferrites show that the magnetic Q's of these ferrites under perpendicular bias are much higher than under parallel bias, and that the high Q region extends over a much wider range of rf permeability. TDK Y-5 ferrite was found to have a magnetic Q of 10,800, 4,800, 1,200 and 129 at rf permeabilities of 1.2, 2.4, 3.7 and 4.5, respectively. Measurements of perpendicularly biased ferrite at various power levels were made in a coaxial line cavity. The Q of Y-5 ferrite was found to decrease by less than a factor of 2 as the power density in the ferrite was increased to 1.3 W/cm^3. A cavity design for a 6 GeV, high current, rapid cycling synchrotron using transversely biased ferrite tuning is described.

Introduction

Ferrite tuning of rf cavities has been used in most of the major synchrotrons of the world to provide the change in frequency necessary as the velocity of the particles increases. The conventional system employs a magnetic bias field which is parallel to the rf field in the ferrite. As the bias field increases, the operating point moves up the magnetization curve decreasing the incremental permeability, which in turn increases the resonant frequency of the circuit or cavity. Such systems have performed reliably for years, however they involve operating the ferrite at low magnetization for a portion of the cycle. At low magnetization the ferrite is lossy, however, the losses become smaller at high magnetization. For synchrotrons which cycle at a moderate rate this power loss is significant but tolerable. For a rapid cycling, high current synchrotron, such as LAMPF II, the power loss in the ferrite and the large amount of ferrite required to accomodate this power loss become nearly intolerable. Fortunately a new technique in which the ferrite bias field is applied in a direction perpendicular to the rf field offers the possibility of greatly reducing the rf power dissipation in the ferrite. This method is being used to achieve the 0.02% tuning required in the beam bunching cavities of the LAMPF Proton Storage Ring.[1] The perpendicular bias field is not very effective in changing the permeability, thus the ferrite can be magnetized to levels near saturation which greatly increases its magnetic Q, while still retaining a reasonably high permeability. Further increases in the bias field do lower the permeability so that rapidly tuned, energy efficient high power cavities are possible with modest quantities of ferrite.

To measure the relevant fundamental properties of ferrites an rf cavity was constructed which incorporates two toroidal ferrite test samples inside of a large magnet which permits the application of perpendicular bias fields up to 12 kilogauss. Low level rf measurements completed to date are very encouraging. They have provided the information necessary to design a full scale prototype rf cavity and indicate that the cavity will require much less ferrite and have much lower power dissipation than the old parallel bias technology would have required.

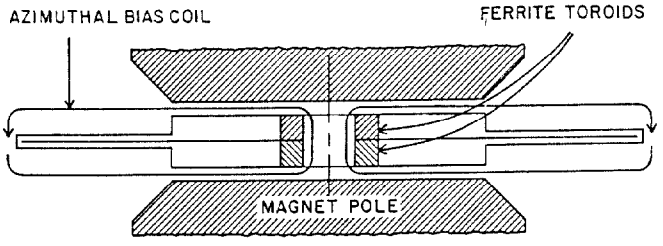

FIG. 1. A schematic drawing of the axially symmetric cavity containing two coaxial ferrite toroids. Maximum rf voltage occurs between the outside edge of the central disk and the cavity wall. The rf current produces azimuthal magnetic fields which are in opposite directions in the two ferrite toroids. The dc magnetic field produced by the magnet pole pieces is perpendicular to the rf magnetic fields in the ferrites while that produced by current in the azimuthal bias coil is parallel to them.

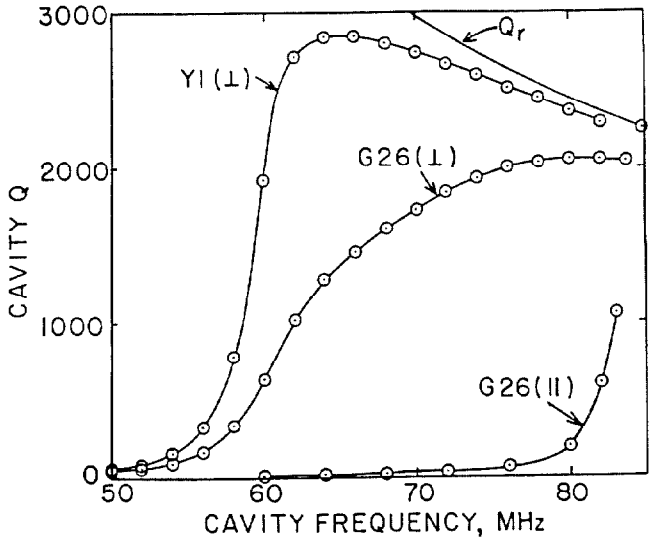

FIG. 2. The variation of cavity Q with frequency. The upper curve (Q_r) is the calculated Q of the cavity, assuming that the ferrite samples are lossless and that the only loss is due to the resistivity of the metal cavity walls. The resistance has been adjusted slightly to agree with the measured Q of the cavity without ferrite at 84.8 MHz. The two G26 curves were obtained with type G26 Mg-Mn-Al ferrite toroids manufactured by TDK. The upper curve was obtained with perpendicular bias applied to the ferrite, while the lower curve shows the cavity Q when it is tuned in the conventional manner with parallel bias. The superiority of the perpendicular bias method is spectacularly evident. Virtually all past synchrotrons have used the inefficient parallel bias method. The Y1 curve was obtained with type Y1 aluminum doped yttrium-iron-garnet ferrite also manufactured by TDK electronics Co., Ltd. Its low loss properties make it a very attractive candidate.

*Work supported in part by the U. S. Department of Energy.

0018-9499/85/1000-2951$01.00© 1985 IEEE

Ferrite Measurement Methods

In order to measure the relevant ferrite properties, it was necessary to design a system in which all of the pertinent field parameters could be measured or calculated, and which could subject the sample to both parallel and perpendicular bias conditions over the frequency range of interest. The coaxial cavity shown in Figure 1 was designed to hold two toroids of the ferrite material under test. A dc current in a toroidal winding wrapped around the cavity could produce an azimuthal magnetic bias field in the ferrite parallel to the rf fields in the toroids. The entire assembly could be inserted between the 12 inch diameter pole pieces of a large electromagnet which could produce a large axial dc bias field perpendicular to the rf magnetic field in the ferrite. A Hewlett-Packard 4191A RF Impedance Analyzer was used to measure the Q of the cavity under various bias conditions. A computer code was written which solved the field equations in the cavity and calculated the cavity Q, including contributions from copper loss, the magnetic Q of the ferrite and the electric Q of the ferrite. The magnetic Q of the material is defined as:

$$Q_m = \frac{W_m}{P_m}\omega,$$

where W_m is the peak ferrite magnetic energy, ω is the angular frequency, and P_m is the power dissipated magnetically in the ferrite. A dielectric Q may be similarly defined. The dielectric Q of the samples was measured by placing a pair of toroids in a parallel plate capacitor. The capacitor was placed in a large magnetic field to reduce the rf permeability so that wave length effects in the ferrite were unimportant. The Hewlett-Packard 4191A RF Impedance Analyzer was then used to determine the Q of the capacitor, from which the electric Q of the ferrite could be calculated. The magnetic Q of the ferrite was calculated from the equation:

$$Q_m = \left[\frac{W}{W_m}\left(\frac{1}{Q_c} - \frac{1}{Q_r}\right) - \frac{W_e}{W_m}\left(\frac{1}{Q_e}\right)\right]^{-1},$$

where:

Q_m = Magnetic Q of the ferrite.
Q_c = The measured Q of the cavity.
Q_r = The calculated Q of the cavity, considering only resistive losses.
Q_e = The electric Q of the ferrite.
W = The total cavity stored energy.
W_m = The peak magnetic energy stored in the ferrite.
W_e = The peak electric energy stored in the ferrite.

The ferrite Q at high power density was measured on three toroids placed in the short circuit end of a quarter wave coaxial line cavity. The cavity was placed inside of a solenoidal magnet so that the ferrite was perpendicularly biased. Sulfur hexafluoride was used to prevent voltage breakdown. The cavity was capacity coupled to a coaxial transmission line so that it was matched at

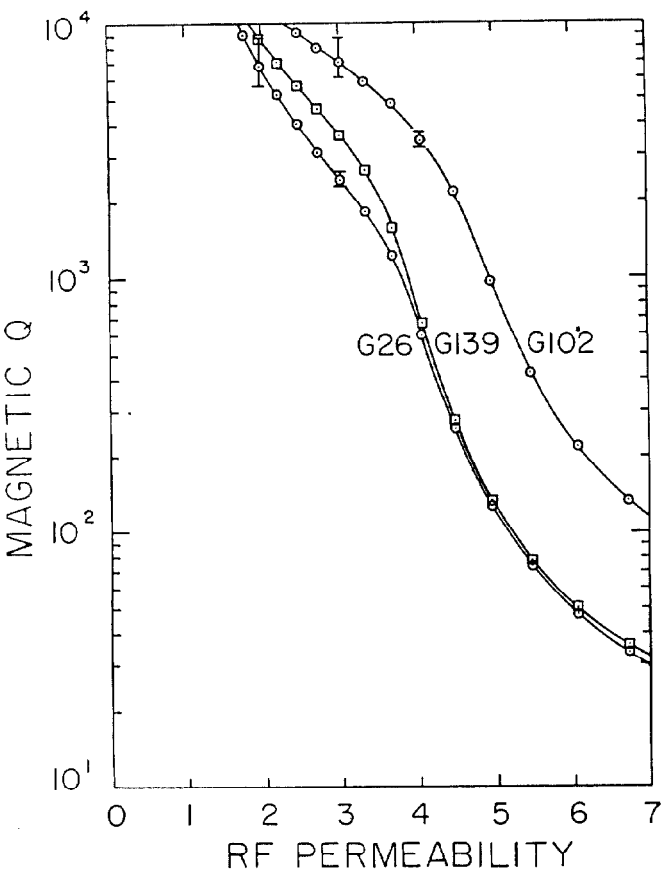

FIG. 3. The magnetic Q of three spinel ferrites under perpendicular bias conditions, presented as a function of the rf permeability. A few typical error bars are shown. They become large at high Q where the energy loss becomes small.

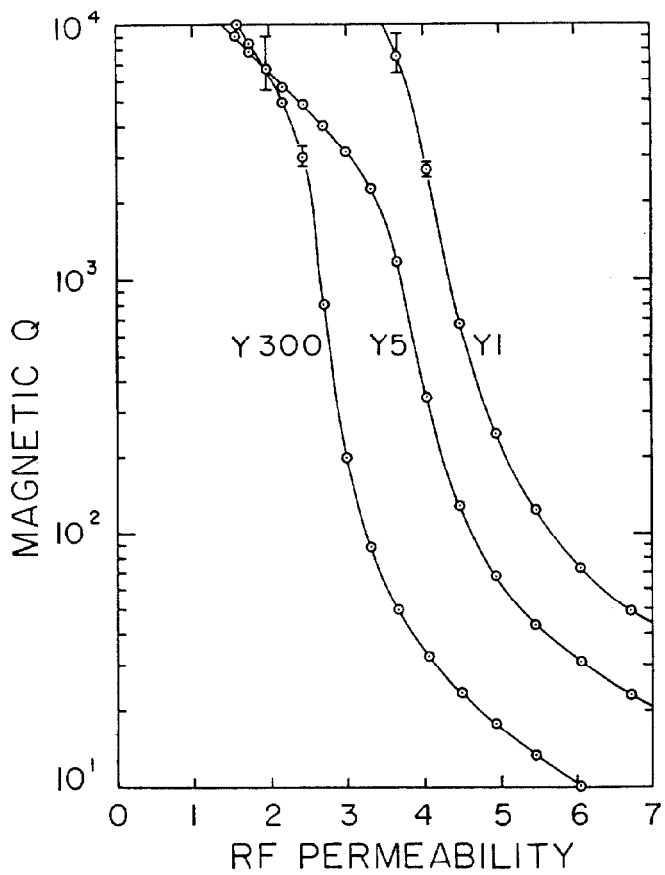

FIG. 4. The magnetic Q of three aluminum doped yttrium-iron-garnet ferrites under perpendicular bias conditions, presented as a function of the rf permeability. The Y5 ferrite behaves differently than the other two above Q=1000, however a second measurement on the Y5 samples confirmed the original result.

resonance. The incident power was kept constant and the frequency was swept linearly at 60 Hz so that the cavity experienced about a 2% duty cycle, permitting measurements up to a ferrite dissipation power density of 1.3 watts/cm^3.

Ferrite Measurement Results

The dramatic improvement of test cavity Q when perpendicular bias is used is illustrated in Figure 2. Six different microwave type ferrite samples manufactured by TDK Electronics Co., Ltd. have been examined. The measured electric Q's of the ferrites near 60 MHz were comparable to the manufacturer's specifications at 9.4 GHz, except that our sample of type G26 has an electric Q value of about 60, which is an order of magnitude lower than the specification at 9.4 GHz. The values of magnetic Q extracted from the test data are ploted in Figures 3 and 4 as a function of the rf permeability, μ. No information has been obtained on the variation of Q_m with frequency, however, little variation is expected since the ferrite is operated far away from the spin-wave resonance. The magnetic Q increases dramatically as saturation is approached. The dependance of ferrite rf permeability on perpendicular bias is well characterized by:

$$\mu_{rf} = 1 + \frac{4\pi M_s}{H} ,$$

where H is the perpendicular bias magnetic intensity inside of the ferrite and $4\pi M_s$ is the saturation magnetization of the ferrite.

Figure 5 shows results from the measurement of the magnetic Q of type Y5 ferrite at high power densities. It is seen that the Q decreases modestly with increasing power density.

Prototype Synchrotron Cavity

The design of a prototype synchrotron cavity featuring perpendicularly biased ferrite is shown in Figure 6. A toroidal C-magnet provides bias which is perpendicular to the rf field in the ferrite. Beryllium-oxide discs between the ferrite toroids conduct heat away from the ferrite with a thermal conductivity almost comparable to that of aluminum, but without providing a path for eddy currents which would retard the bias field. Changing the ferrite permeability from 3.0 to 1.5 tunes the cavity from 50 MHz to 60 MHz. If the Q_m of Y5 ferrite is assumed and Q_e is taken to be 5000, the cavity Q is calculated to vary from 1800 to 5700 over this range.

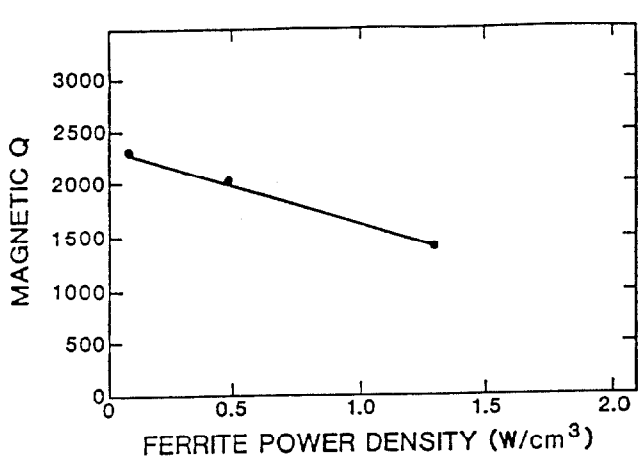

FIG. 5. The magnetic Q of TDK Y5 ferrite as a function of pulsed power dissipation measured at 71.5 MHz. The ferrite was perpendicularly biased to a relative permeability of 3.1.

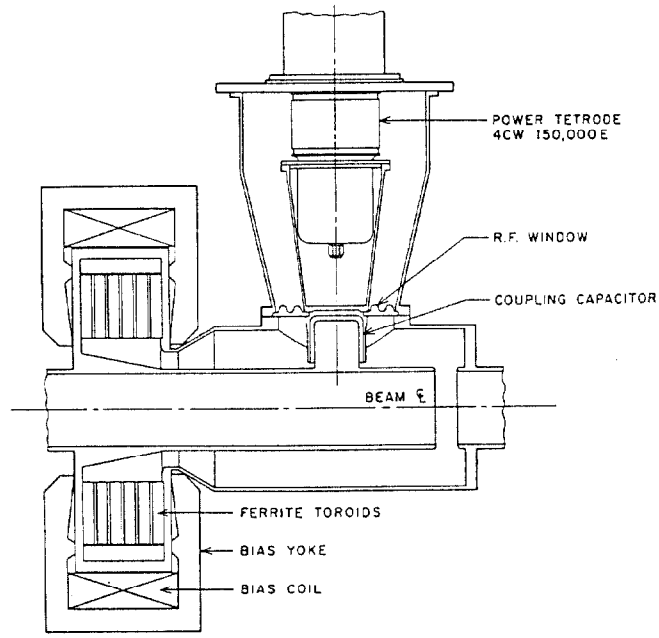

FIG. 6. A cross section view of the prototype synchrotron cavity. The C-shaped magnet provides perpendicular bias to the ferrite. The anode of the power tetrode is capacitively coupled to the drift tube by a short coaxial line passing through an rf window.

Acknowledgements

We wish to thank Professor William G. May of the Department of Electrical and Computer Engineering at the University of Colorado for providing the Hewlett Packard RF Impedance Analyzer used for these measurements. It is also a pleasure to acknowledge contributions in the form of stimulating discussions and ideas from Dr. H. A. Thiessen of the Los Alamos National Laboratory and Professor G. P. Rodrigue of the Georgia Institute of Technology.

Reference

[1] Rapidly Tuned Buncher Structure for the Los Alamos Proton Storage Ring (PSR), L. M. Earley, G. P. Lawrence and J. M. Potter, IEEE Transactions on Nuclear Science, NS-30, 3511-13, 1983.