THE LOS ALAMOS FREE-ELECTRON LASER (FEL) RF SYSTEM*

P. J. Tallerico and M. T. Lynch, AT-5, MS H827
Los Alamos National Laboratory, Los Alamos, NM 87545 USA

Summary

The FEL rf system was designed for 3.6-MW rf pulses from two klystrons to drive two linacs and one deflection cavity at 1300 MHz. Two 108.33-MHz subharmonic buncher cavities and one fundamental buncher were also built, each powered by a 5-kW amplifier. A single phase-coherent source drives the various amplifiers as well as the grid of the electron gun, which is pulsed at 21.67 MHz. The initial buncher system did not work as well as expected, and the first linac tank required more rf power than anticipated. The light output was extremely sensitive to amplitude and phase errors. More powerful klystrons were developed and installed, and a method was discovered for operating a single subharmonic buncher and allowing the first linac to complete the bunching process. This paper shows the actual configuration used to operate the laser and discusses future improvements.

System Description and Initial Operation

The initial designs for the rf and bunching systems for the Los Alamos FEL are described in Refs. 1 and 2, respectively. The bunching system consisted of two subharmonic bunchers driven by 5-kW, 108.33-MHz triode amplifiers and a single, 1300-MHz buncher powered by a 5-kW triode amplifier. The two accelerator tanks were each designed to be driven by a 3.6-MW klystron at 1300 MHz. The injector was a gridded electron gun that was pulsed for 3 to 5 ns at a 21.67-MHz rate.

Several problems were noted during the initial operation of the system. First, the buncher system had multipactor discharges that prevented achievement of the design parameters. The multipactoring was especially troublesome in the subharmonic cavities. The multipactoring prevented the attainment of the design buncher gap voltages; therefore, more charge was injected into the accelerator, and much more rf power was needed to overcome the very large beam loading in the first accelerator. By gradually increasing the klystron power-supply voltage, 4 MW of peak power was obtained from the L3707 klystrons that had been obtained from military surplus stores. It was clear that these klystrons would not operate reliably at 4 MW; therefore, new klystrons were ordered with a 4-MW minimum-power specification. The new klystrons, Thomson type TH-2095, actually produced over 5.5 MW in their factory acceptance tests and have been operated at the 4-MW level in Los Alamos. The new klystrons were tested at the factory with a line-type modulator and thus were only subject to high voltage during the pulse. Under these conditions, the TH-2095's were very reliable, with no sparking at the 125-kV anode level and at power levels above 5.5 MW. The Los Alamos FEL modulator is a variation of the floating-deck type[3] used on LAMPF. The Thomson klystrons degraded rapidly in the Los Alamos FEL service, and only provided 4-MW rf power for tens of hours before losing their high-voltage standoff capability.

Examination at the factory showed that the modulation-anode ceramic was coated with a conductive metallic film, rich in magnesium, which had been deposited by small arcs across the ceramic. The metal vapor deposited by the arcs originated from a corona ring near the ceramic insulator. To reduce the possibility of this failure mode, the energy dissipated in the klystron during a crowbar will be reduced by a factor of 3 by raising the impedance in series with the capacitor bank and reducing the delay in the crowbar protective circuit. Several geometrical changes will also be made inside the TH-2095 to increase the high-voltage standoff capability. A modified klystron called the TH-2095A, rated at 6.25 MW, is being developed and should be available before this conference.

The subharmonic buncher system was difficult to stabilize, probably because of drifts in the electron-gun pulse circuits, but was less difficult after installation of a gun stabilization circuit.[4] The buncher amplifiers were also power limited, and the control bandwidth of the feedback circuits was too small to achieve stable operation. Various combinations and operating schemes for the buncher were tried in an attempt to achieve simple but stable operation. Lasing was first achieved using only the fundamental buncher in an open-loop configuration. This greatly simplified the control requirements and maximized the power available from the buncher amplifier because no control margin was required with the open-loop configuration. Stability was adequate to achieve lasing over approximately 70 μs of the 100-μs rf pulse.

Using the fundamental buncher alone, however, caused other difficulties in the system operation. The full width of the electron gun pulse is 5 ns, which is over five periods at 1.3 GHz. Each gun pulse was bunched into five separate bunches by the fundamental buncher. The four extra bunches caused increased beam loading in the first accelerator section. As a result, the amplitude control for the accelerators was run open loop to maximize the available power. The accelerator phase control was run closed loop because the phase control did not require a large gain margin. Another problem with this mode of operation was that five separate micropulses were lasing in the optical cavity. Because of these difficulties, only a limited set of optical experiments could be performed. Enhanced operation of the FEL required the use of a subharmonic buncher to obtain only one electron micropulse per electron gun pulse and to obtain higher peak bunched currents.

Best operation (60-A peak current in the optical cavity) was ultimately achieved using only the second-subharmonic buncher. The first-subharmonic buncher was tried alone and with the fundamental buncher, but the fields in the cavity had to be so low that severe multipactoring was encountered. Titanium plating of the cavity to reduce secondary emission did not appreciably improve the situation. The speculation was that the sparks removed the titanium film, but the exact cause of the failure of the coatings is unknown.

The Present Status of the rf System

A schematic diagram of the present rf system is shown in Fig. 1. The FEL has been very sensitive to noise on the electron beam,[5] and the present phase and amplitude control system[5] does not have sufficient gain above 50 kHz to reduce the noise. Also, the 50 m between the accelerators and the klystron causes a

*Work supported by the US Dept. of Defense and the Ballistic Missile Defense Advanced Technology Center.

0018-9499/85/1000-2865$01.00© 1985 IEEE

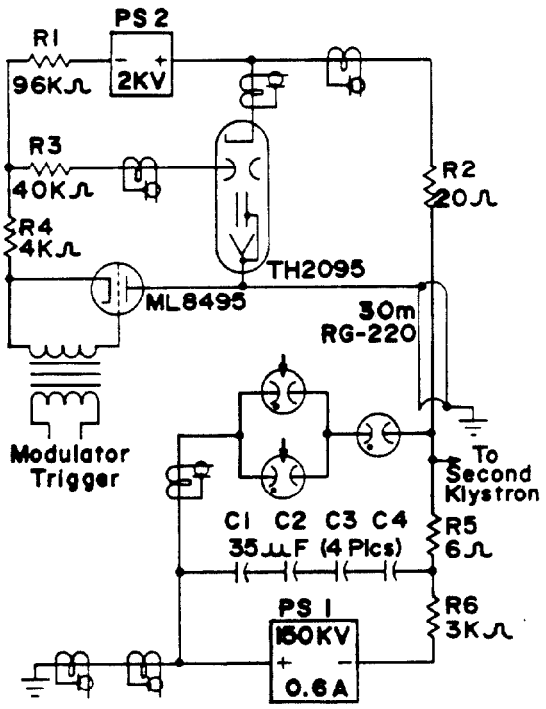

Fig. 1. Schematic diagram of the high-voltage section of the FEL rf system.

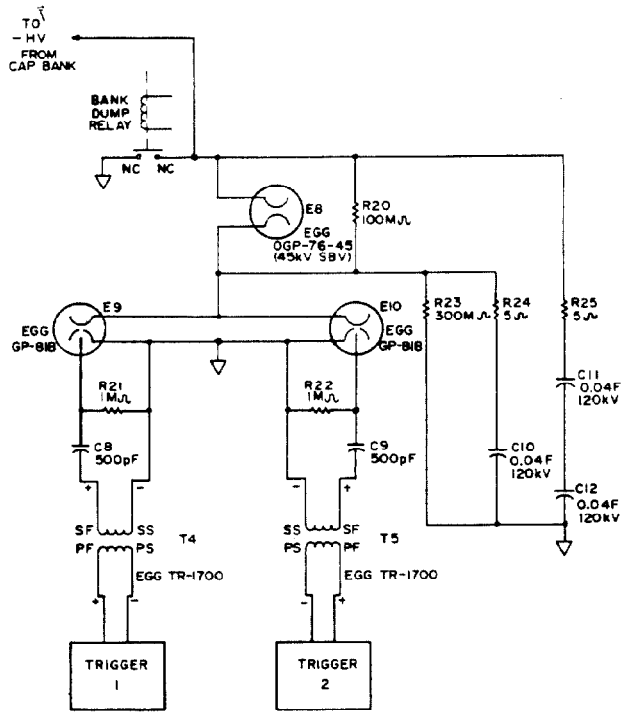

Fig. 2. The three-gap crowbar circuit.

propagation delay that limits the control bandwidth by adding another pole in the loop frequency response. A new klystron room has been built that will reduce the feedback transmission path to 20 m, thus permitting feedback improvements.

The original specifications for the TH-2095 were that the spark energy be limited to 100 J. Experience has shown that even with the 30 to 50 J per spark allowed with the old crowbar, cumulative damage was done to the klystrons. A new goal of 10 to 20 J per spark has been set. A schematic of the new crowbar system is shown in Fig. 2. The crowbar consists of two triggered spark gaps in parallel for redundancy and a single overvoltage gap in series to hold off the 135 kV required for the TH-2095A.

The present capacitor bank rating is 8.75 μF, and it stores 85.75 kJ at 140 kV. The droop during the 150-μs pulse is 4 kV, which modulates the klystron output power by 7% and also modulates the phase several degrees. A larger capacitor bank and an ignitron crowbar are under consideration for future system improvements. Another interesting option for droop reduction is passive compensation[6] using a parallel RL network, or even an active series regulator. Another possibility is to vary the modulating anode voltage during the pulse to raise the klystron current as the voltage decreases. The klystron vendor, however, does not want the modulating anode to become more positive than the klystron body for reliability reasons; thus, this option may have limited utility. The four droop-compensation methods mentioned above are currently being studied for applicability in reducing the droop. The passive methods appear most promising at this time. Three compensation circuits are shown in Fig. 3.

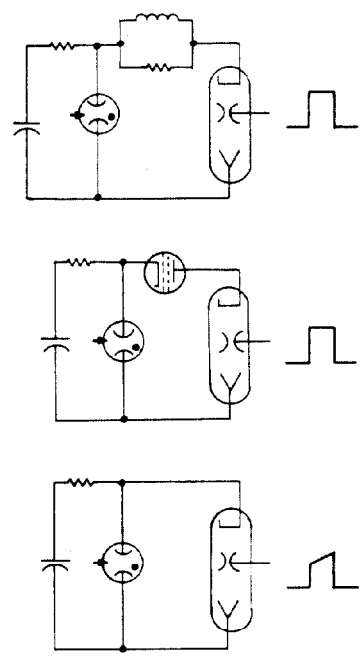

Fig. 3. Three droop-compensation circuits. Top, passive (RL) compensation; center, active series regulator; bottom, the shaped modulating anode pulse compensator.

In view of the much more stringent crowbar energy requirements for the TH-2095, every effort is being made to reduce the crowbar turn-on delay in this circuit to 1 or 2 μs. A switch has been added to the series spark gap to maintain as high a voltage as possible in the triggered spark gaps when operating below 100 kV. The crowbar fires on any of three signals: the total modulator and klystron current, the integral of total modulator current, or the modulating anode current. During the course of the arcing problem, the resistor in series with the modulating anode (see Fig. 1) was increased in value (it will be 40 kΩ when the rebuilt klystrons are used). In addition to these circuit improvements, a larger modulating anode ceramic and an improved corona ring system will be designed into the TH-2095A. Thus, the klystron life should be greatly enhanced.

Acknowledgments

The authors are indebted to Don Reid and Fred Nylander for several good ideas on the modulator and crowbar systems. Excellent mechanical and electrical work on this system was done by our technicians, John Hornkohl, Jake Chavez, and Chris Humphry.

References

1. C. C. Friedrichs, P. J. Tallerico, and W. J. Hoffert, "The RF System for the Los Alamos Free-Electron Laser," IEEE Trans. Nucl. Sci. 30 (4) (August 1983), 3441.

2. J. S. Fraser, "Subharmonic Buncher for a High-Efficiency Free-Electron Laser," IEEE Trans. Nucl. Sci. 30 (4) (August 1983), 3115.

3. P. J. Tallerico, R. L. Cady, and J. D. Doss, "Design and Performance of the LAMPF 1-1/4 MW Klystron Modulator," Conference Record of the 11th IEEE Modulator Symp. (September 1973), 56.

4. M. T. Lynch, P. J. Tallerico, and E. F. Higgins, "Phase and Amplitude Feedback Control System for the Los Alamos Free-Electron Laser," these proceedings.

5. M. T. Lynch, R. W. Warren, and P. J. Tallerico, "The Effects of Linear Accelerator Noise on the Los Alamos Free-Electron Laser," submitted for publication to IEEE Journal of Quantum Electronics, special issue on Free-Electron Lasers (1985).

6. T. A. Weil, "Design Charts for Droop-Compensation Networks," Conference Record of the 11th IEEE Modulator Symposium (September 1973), 156.