© 1985 IEEE. Personal use of this material is permitted. However, permission to reprint/republish this material for advertising or promotional purposes or for creating new collective works for resale or redistribution to servers or lists, or to reuse any copyrighted component of this work in other works must be obtained from the IEEE.

INTERNAL POLARIMETERS FOR THE POLARIZED PROTON BEAM AT THE KEK 12 GeV PS

Hikaru SATO, Shigenori HIRAMATSU, Takeshi TOYAMA[a], Dai ARAKAWA
Hiroshi SAKAMOTO[b], Ken-ichi IMAI[c] and Norio TAMURA[c]

National Laboratory for High Energy Physics
Oho-machi, Tsukuba-gun, Ibaraki-ken, 305, Japan

Abstract

An internal polarimeter was constructed to detect the beam polarization in KEK proton synchrotron (PS) from T_p = 500 MeV to 12 GeV. The polarimeter was installed in the main ring and successfully used for the measurement of the beam polarization at 500 MeV. We report the design and the performance of this polarimeter and the results of this first measurement. In addition to that, we also report the design of another internal polarimeter for monitoring the depolarization in the booster.

Introduction

Both the booster and the main ring of KEK PS are strong focusing synchrotrons and therefore strong depolarizing resonances are expected during acceleration[1-4]. Especially, the main ring has many depolarizing resonances. It is quite necessary to measure the beam polarization before and after each resonance during acceleration to tune the polarized beam through the depolarizing resonances with minimum polarization loss. For this purpose, an internal polarimeter is the best one. So an internal polarimeter is installed in the straight section II-2F of the 12 GeV PS main ring. Hereafter we call it the main ring polarimeter.

The design philosophy of the main ring polarimeter is as follows.

1) The polarimeter can be operated at any energy from 500 MeV to 12 GeV to study each resonance.

2) The absolute value of the beam polarization at low energy, especially at 500 MeV, can be measured with good accuracy.

3) For the tuning of the accelerator, the beam polarization should be measured in a short period.

4) To avoid the frequent access to the polarimeter which is located inside of the accelerator tunnel, the polarimeter must be reliable and easy to operate and free from maintenance.

To fulfill the above requirements, we constructed the main ring polarimeter which consists of a polyethylene string target and scintillation counter telescopes. The beam polarization can be obtained by measuring the left-right asymmetry of the proton-proton elastic scattering. At least at low energy, the separation from the proton-carbon reaction is expected to be good enough to use it as the absolute polarimeter.

At high energy, it is difficult to separate proton-proton elastic scattering from the background with this simple set-up and the main ring polarimeter can be used as a relative polarimeter. But the main ring polarimeter has a great advantage for the tuning of the accelerator because the operation of the extracted beam line with frequent energy change can be avoided.

The beam from the booster is sharply bunched so that the measurement of the beam polarization is very difficult by a polarimeter located in the beam line from the booster to the main ring. So another polarimeter is installed in the straight section II-1F for the exclusive use of measurement of the polarization at 500 MeV. We call it the injection polarimeter of the main ring. This is used to tune the beam through depolarizing resonances in the booster.

Design and Construction of the Main Ring Polarimeter

Polarimeter target system

A polarimeter target system consists of a scattering chamber and a target mechanism.

The scattering chamber has two 100 μm thick SUS foil windows of 62 mm diameter for recoil protons from 57° to 83° of scattering angle. The multiple scattering of recoil protons (∿ 80 MeV at $|t|$ = 0.15 $(GeV/c)^2$) by the SUS foil is estimated to 0.5° and the energy loss is about 5 MeV.

The target mechanism which is shown in Fig. 1, is mounted on a top plate of the scattering chamber. It has two target frames which can be rotated by 90 degrees independently with two torque motors. The torque motors mounted in hermetic housing are cooled by water. The target is rotated to the scattering position at beginning of the flat top. Two target frames mount a 150 μm polyethylene string target and a 220 μm carbon fiber target, respectively. The target string can be automatically wound up in order to avoid the burn-out of the string due to the beam heating. However if the beam intensity is lower than 1×10^9 ppp, the target string can be fixed.

The scattered proton in the forward direction passes through a 3 mm thick aluminum pipe of 160 mm diameter connected to the scattering chamber. In order to minimize the multiple scattering by the pipe wall, we chose the aluminum pipe as thin as possible. It is less than 0.5° at the worst case.

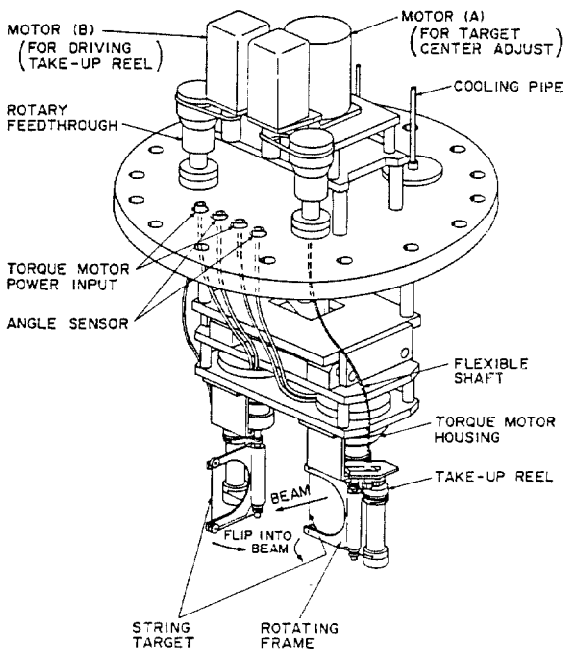

Fig. 1 Target mechanism of the main ring polarimeter.

a Nagoya University, Chikusa-ku, Nagoya, 464, Japan
b Tsukuba University, Sakura-mura, Niihari-gun, Ibaraki-ken, 305, Japan
c Kyoto University, Sakyo-ku, Kyoto, 606, Japan

0018-9499/85/1000-1950$01.00© 1985 IEEE

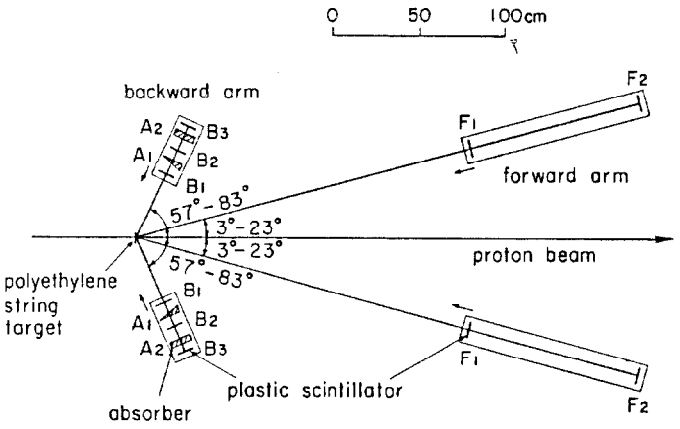

Fig. 2 Schematic of the counter telescope.

Counter telescope and data processing

Figure 2 shows a schematic of the counter telescope. The forward counter telescope consisted of two scintillation counters is pulled by a winding steel wire of which tension is kept to be constant by a draft spring to vary the position from the target. The distance between F2 and the target is variable from 900 mm to 3000 mm. The arm can be rotated from 0° to 23°, and the minimum detection angle is 3°.

The backward counter telescope consists of three scintillation counters and two absorbers. Angle and position of the backward counter telescope are fed by the lead screw. The distance between B2 and the target is varied from 300 mm to 450 mm. The backward arm is rotated from 57° to 83°. To avoid the frequent access to the polarimeter in the accelerator tunnel, these can be driven by a remote controller from the center control of the accelerator.

The angle and the distance are monitored by a high precision potentiometer (0.1 %). The accuracy of the angle setting is less than 0.2°. The setting error of the turn table pivot to the beam center is less than 0.5 mm. All arms are leveled within 0.4 mm.

The sizes of these counters are summarized as follows.

	Width × Height × Thickness (mm)
F1	20 × 80 × 5
F2	20 × 120 × 20
B1	40 × 180 × 3
B2	40 × 200 × 5
B3	50 × 250 × 5

All scintillators (NE110) are viewed by photomultipliers (Hamamatsu R1398) of 28 mm diameter which have good time resolution. The transit time spread is less than 0.65 nsec. The F2 and B2 scintillators have two photomultipliers F2U and F2D (B2U and B2D) on both ends so that the vertical position of the detected particle can be measured by means of time difference between the two photomultiplier output signals. The position information can be used for the coplanarity measurement to identify the proton-proton elastic scattering. The proton-proton elastic scattering at $|t| \simeq 0.15$ (GeV/c)^2 can be measured from T_p = 0.5 to 7 GeV by varying the angle and position of both counter telescopes. Above 7 GeV, measurement should be done in higher $|t|$ region than 0.15 (GeV/c)^2.

A wedge shape aluminum absorber A1 equalizes the recoil proton energy over the acceptance of B2. An aluminum absorber A2 is placed between B2 and B3 counter to reject pions and other high energy particles by using B3 counter as a veto.

L(R) denotes the coincidence count corresponding to the left (right) forward scattered proton and right (left) backward scattered proton.

$$L, R = (F1 \cdot F2U \cdot F2D \cdot B1 \cdot B2U \cdot B2D \cdot \overline{B3}).$$

F2U (B2U) and F2D (B2D) denote two photomultiplier output signals from F2 counter.

The rate of accidental coincidence is estimated by a delayed coincidence. The discriminator (LeCroy 825) which has two threshold levels for the good time resolution is employed for the F2 and B2 counters. The position of the detected particle in the F2 counter is obtained by the time difference (τ_F) between F2U and F2D signals. And τ_B is the time difference between B2U and B2D signals. Thus the correlation between the two time differences (τ_F and τ_B) gives the coplanarity of the event. These timing informations are read into a microcomputer (MINICOM-80ZB) through a CAMAC time to digital converter (TDC). The coplanarity plot of the events can be made by the on-line analysis to extract the elastic proton-proton scattering. The event rate (maximum 500 Hz) is limited by the dead time of CAMAC and computer system in this scheme. The other scheme is to use two time to analog converters (TAC) instead of CAMAC TDC and add two outputs from the TAC with appropriate attenuator to make the "coplanarity plot". In the second scheme the counting rate can be increased up to several tens kHz.

The scaler counts from various logic outputs are read into the microcomputer through a CAMAC scaler interface after acceleration cycle. The beam polarization P is given by

$$P = \frac{1}{A_y} \frac{L - R}{L + R} ,$$

where A_y is the analyzing power.

The coincidence count (L or R) includes background events mainly due to quasi-elastic scattering from the carbon in the polyethylene target, and its analyzing power is lower than that of pure proton-proton elastic scattering. But the use of coincidence count for the calculation of the beam polarization has great advantage of quick estimation of the polarization because of high counting rate. The effective analyzing power can be calibrated by the coplanarity measurement described above.

The calculated value of the beam polarization transfered through CAMAC VIDEO RAM is displayed at the operator console of the central control room of the accelerator.

Test Reults of the Main Ring Polarimeter

The polarization was measured at 500 MeV coasting beam in the main ring to investigate the depolarization in the 500 MeV booster synchrotron as the first step of polarized proton acceleration at KEK PS[3,4].

The decay constant of the beam is about 15 msec when a 150 μm diameter polyethylene target is inserted into the beam at 500 MeV. The single count event rate of B1 counter is ∿ 400/bunch and the coincidence event rate is ∿ 12/bunch at the beam intensity of 1 - 2 × 10^8 ppp. The scattered protons could be successfully measured without pile up.

Figure 3 shows the coplanarity plot obtained by TACS. It shows a left-right asymmetry of the coplanar events. FWHM of left and right coplanarity plot are 0.54 nsec and 0.59 nsec, respectively. Figure 4 shows a comparison of coplanarity plot from the polyethylene and the carbon target.

The contamination from carbon in the polyethylene is only a few percent. The systematic left-right asmmetry is checked by measuring with unpolarized beam. The asymmetry for the unpolarized beam is less

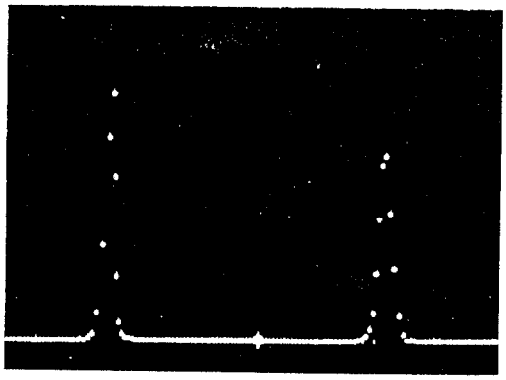

Fig. 3 Left-right asymmetry of the coplanarity plot.

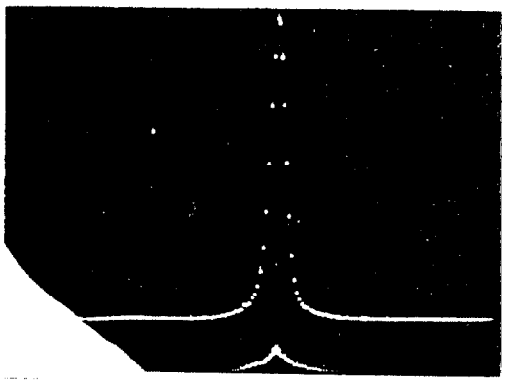

Fig. 4 Comparison of the coplanarity plot from the polyethylene and the carbon target.

than 0.2 %.

The value of the analyzing power A_y is 0.42 ± 0.025 at T_p = 500 MeV and t = - 0.15 $(GeV/c)^2$)[5]. The effective analyzing power including the contamination can be calibrated by the coplanarity measurement. At 500 MeV, most of the coincidence events are the coplanar events, so the effective analyzing power is almost the same as that of coplanar events. The beam polarization is measured in a few minutes with ≦ 2 % statistical accuracy.

Design of the Injection Polarimeter of the Main Ring

The beam from the booster is sharply bunched so that the measurement of the beam polarization by the counting method is very difficult in the beam line from the booster to the main ring. As the polarization measurement with the main ring polarimeter at 500 MeV was quite successfull, the injection polarimeter for the polarization measurement of the booster beam is designed as follows.

One more bunch is injected into the main ring from the booster before normal 9 pulse injection for acceleration. The polarimeter is operated at 500 MeV coasting beam with t = - 0.15 $(GeV/c)^2$ by using this extra beam. The 150 μm diameter pollyethylene target is preset on the beam line before the extra beam injection, and it is removed off immediately after the polarization measurement.

Because of the decay constant of the coasting beam is about 15 msec and the accelerating cycle of the booster is 50 msec, this extra beam does not interfare the normal beam injection.

The proton-proton elastic scattering is defined by a coincidence method of two forward counters and one backward counter. The effective analyzing power is calibrated by using the main ring polarimeter.

Figure 5 shows a schematic of the injection polarimeter in the main ring. It is estimated that the polarization measurement can be performed in a few minutes with a few percent statistical accuracy.

Summary

The beam polarization in the main ring was measured at 500 MeV by the main ring polarimeter. The high quality coplanarity plot of the proton-proton elastic scattering was obtained, and the absolute beam polarization was measured in a short period. It was quite useful to investigate the depolarizing resonances in the 500 MeV booster synchrotron.

Another internal polarimeter, was designed for the investigation and monitoring of depolarization in the booster. It is useful to tune the depolarizing resonances in the booster, and the main ring polarimeter should make full use of tuning the polarized beam acceleration in the main ring.

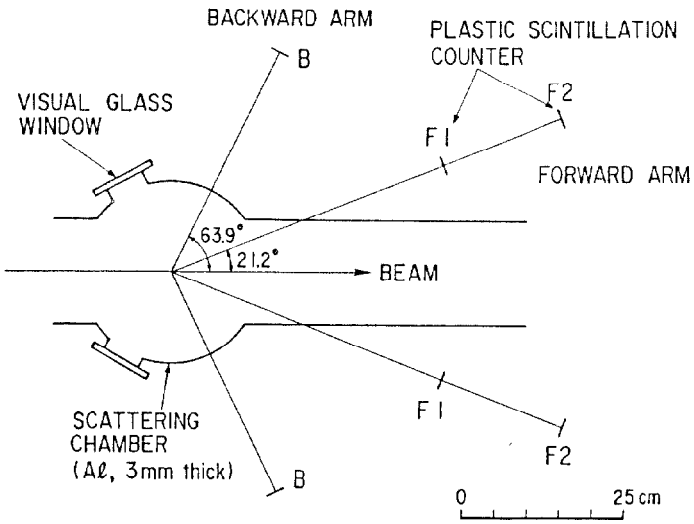

Fig. 5 Schematic of the injection polarimeter inthe main ring.

Acknowledgments

Authors wish to acknowledge Professors S. Suwa, T. Nishikawa, T. Kamei, S. Fukumoto and A. Masaike for their support to this work. Authors also wish to thank Dr. J. Kishiro, Dr. Y. Mori, Mr. A. Takagi, Mr. K. Ikegami, Mr. Z. Igarashi, Mr. T. Kawakubo, Mr. A. Ando, Mr. H. Yamaguchi and staffs of KEK PS for their very helpful assistance.

References

1. S. Hiramatsu et al., Proc. 5th Int. Symp. on High Energy Spin Physics, Brookhaven, 1982 (AIP Conf. Proc., No.95, 1982, p.419).
2. T.K. Khoe, KEK Report, KEK-81-15, 1981.
3. S. Hiramatsu et al., KEK-83-28.
4. S. Hiramatsu et al., Proc. 6th Int. Symp. on High Energy Spin Physics, Marseille, 1984, to be published.
5. D. Aebischer et al., Nucl. Phys., A276 (1977) 445.