© 1985 IEEE. Personal use of this material is permitted. However, permission to reprint/republish this material for advertising or promotional purposes or for creating new collective works for resale or redistribution to servers or lists, or to reuse any copyrighted component of this work in other works must be obtained from the IEEE.

IEEE Transactions on Nuclear Science, Vol. NS-32, No. 5, October 1985

A MULTI-CHANNEL PULSER FOR THE SLC THERMIONIC ELECTRON SOURCE*

M. J. Browne, J. E. Clendenin, P. L. Corredoura, R. K. Jobe,
R. F. Koontz and J. Sodja
Stanford Linear Accelerator Center
Stanford University, Stanford, California 94305

Abstract

A new pulser developed for the SLC thermionic gun has been operational since September 1984. It consists of two planar triode amplifiers with a common output triode driving the gun cathode to produce two independent pulses of up to 9 A with a 3 nsec FWHM pulse width. Three long-pulse amplifiers are also connected to the cathode to produce pulses with widths controllable between 100 nsec and 1.6 μsec. Each amplifier has independent timing and amplitude control through a fiber optic link to the high voltage plane of the gun cathode-grid structure. The pulser and its operating characteristics are described.

Introduction

The basic components of the SLC injector were installed in the spring of 1981. Since then the injector has been continuously improved.[1,2] Although a laser gun capable of producing polarized electrons is still planned, the original thermionic gun[3] remains in place. This gun uses the EIMAC Y-796 cathode-grid assembly. With a drive of 200 V the gun is capable of producing up to 20 A peak current with a rise and fall time of less than 200 psec.[4]

The SLC requires two electron bunches per accelerating RF pulse of the linac. (The second bunch will be accelerated to a positron target.) The required charge of 8 nC for each electron bunch must be contained in a small fraction of a cycle of the accelerating S-band RF. Space charge forces make it difficult to deliver the required charge to the bunching system in a pulse width of much less than 1 nsec. Consequently two sub-harmonic RF cavities (SHB) are used[5] in addition to the normal S-band buncher to compress gun pulses of up to about 3 nsec width into a single S-band cycle.

The transverse emittance of the injector electron beam is dominated by the bunching process. To avoid the disruption to the beam caused by wakefields generated by the beam passing through the linac accelerating sections, the transverse emittance of the beam is reduced by about an order of magnitude during one inter-pulse period in a 1.2 GeV damping ring. The damping ring parameters require the two electron bunches to be 61.6 nsec (11 SHB cycles) apart.

The original gun pulser consisted of four, 3-transistor avalanche pulsers driving 50 Ω coaxial inversion transformers that produced a gun pulse of 6 to 7 A in a 3 nsec pulse.[3] While this resulted in a single-bunch beam of adequate charge and emittance, the recovery time of the avalanche transistor circuit (several μsec) precluded the possibility of providing the second bunch required by the SLC. Consequently a new pulser has been developed that is capable of producing two pulses of the required charge of any (including zero) interval. Additional independent amplifiers also are provided that can drive the gun cathode to produce electron pulses of 100 nsec to 1.6 μsec width for non-SLC experiments.

Fast Pulsers

The new SLC pulser uses a planar triode to provide the repetitive high current pulses required of the gun.[6] Planar triodes are small rugged microwave tubes designed to operate up to 3 GHz. The output tube requires a large drive pulse which would normally be provided by an avalanche transistor circuit. However, because of the repetitive pulse limitations of such a circuit, it was decided to use two independent drive circuits with their outputs summed together. The two drive circuits allow independent control of the pulse separation and pulse amplitude.

The pulser schematic is shown in Fig. 1. Two small planar triodes, type 8755, produce two independent drive pulses to an output amplifier triode, type 8940. The impedance matching between stages is accomplished with a coaxially-wound RF transformer, T3, although there are other methods that would be equally adequate. The output triode, V3, is operated in a common-cathode configuration, which provides a significant current gain. The plate of V3 directly drives the gun cathode, and since the tube is working into a very small load impedance, there is very little risetime degradation due to Miller-effect feedback capacitance between the plate and grid.

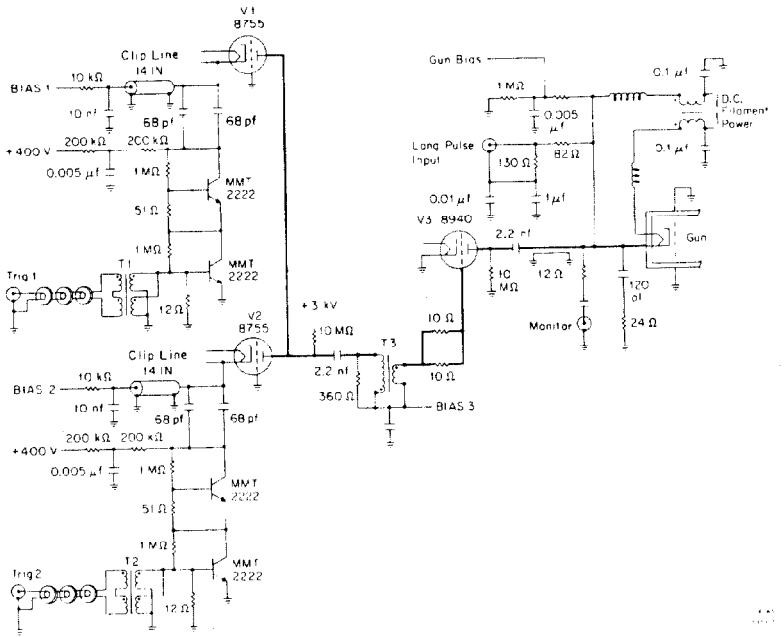

Fig. 1. Schematic diagram of the fast double pulser.

The two input tubes, V1 and V2, are operated in grounded-grid configuration. This configuration is used to isolate the two fast pulser circuits from each other thus preventing false triggering. Each of the input tubes is driven by its own independently triggered avalanche transistor pulser. An

* Work supported by the Department of Energy, contract DE-AC03-76SF00515.

0018-9499/85/1000-1829$01.00© 1985 IEEE

avalanche pulser discharges the energy stored in two 68 pf capacitors to form a drive pulse whose width is determined by a 14-inch clip line at the cathode. For convenience the control bias for the tube is supplied through this same clip line.

Each of the fast pulsers will produce a 200 V pulse into a 10 Ω resistive load.

The fast pulser circuitry is contained on a PC card with an integral plug that mates directly to the socket at the rear of the gun cathode-grid assembly as shown in Fig. 2. The pulser card is readily inserted or removed by means of the handle shown in the figure. The fast pulser drivers and bias controls as well as the filament supply and the long-pulse pulser cards are housed in a high voltage deck. As indicated in Fig. 3, the HV deck is located immediately behind the gun. The deck as well as the ground plane of the fast pulser card is electrically connected to the gun grid. A 55 CFM blower located on the HV deck provides the necessary air flow through the 2-inch manifold shown in Fig. 2 to cool the gun socket. The HV deck is suspended from the ceiling by several acrylic rods and by the 300 kV isolation transformer that supplies ac power to the HV deck. Both the deck and the gun are in an air atmosphere with no surrounding cage. The deck and the high voltage end of the gun insulator are equipped with polished aluminum corona shields to keep the electric field gradient low enough to prevent air ionization.

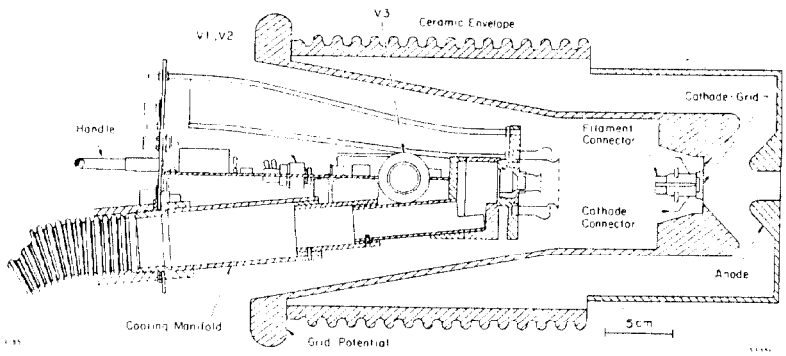

Fig. 2. An outline of the fast double pulser card shown partially withdrawn from the conical re-entrant portion of the gun body.

Control System

Programming and readback of the electronics on the HV deck is accomplished through a 22-cable fiber optic link. A fiber optic interface chassis at ground potential contains optical drivers for the pulser timing signals and analog transmitters and receivers for controlling the filament and bias levels. At present there is readback only for the gun bias and the filament voltage.

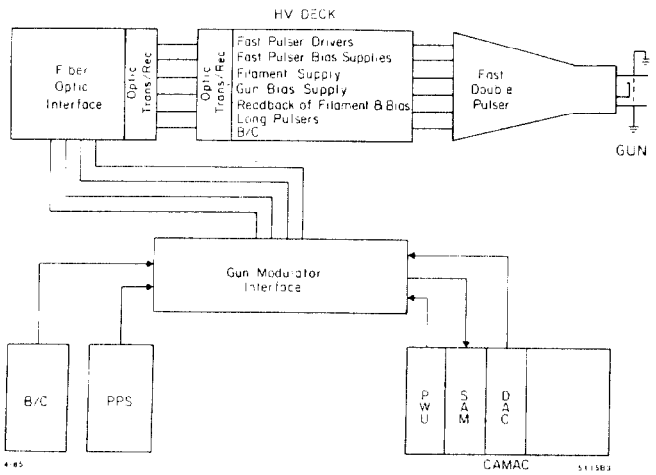

Fig. 3. A block diagram of the pulser control system.

The link for the fast pulser triggers utilizes a fast LED driver, a 100 μ graded-index cable, and an avalanche photodiode at the receiver card. The receiver card contains the pulse amplifiers which produce the triggers for the fast pulsers.

The analog signals for filament and bias voltages are transmitted using voltage to frequency conversion. The resulting pulse train is transmitted through a standard Hewlett-Packard fiber optic link[7] and converted back to analog levels at the receiver.

The gun modulator interface chassis shown in Fig. 3 allows local control of the bias and filament levels or remote control by the SLC computer control program through Camac modules. Additionally the SLAC personnel protection system (PPS) and beam containment (B/C) system are connected to the gun control system through the modulator interface.

Performance

The pulser system described above has been used at SLAC since September, 1984, for the generation of all SLAC beams with the exception of low-energy e^- beams, which are now generally obtained from the newly commissioned Nuclear Physics Injector.[8] PEP and SPEAR beams are produced by the fast pulsers operating at moderate intensity and without pulsing the SHB RF. The long-pulse pulsers, which produce beams for fixed-target experiments, are connected directly to the gun cathode and possibly degrade the performance of the fast pulsers slightly but otherwise perform nicely.[9] They produce electron pulses of up to 3 A peak current. With the linac SLEDed,[10] these beams are limited to a width of $\leq$ 200 nsec. Beams of up to 1.6 μsec width have been injected into the linac during two short unSLEDed periods, but these wide pulse beams have not yet been adequately transported to the high-energy physics experimental areas.

Although the gun was designed to operate at up to 200 kV, the voltage was initially limited to 150 kV due to arcing which occurred in spite of the SF_6 atmosphere which was maintained around the gun. The original avalanche pulser was particularly susceptible to damage by this HV arcing. The arcing took place primarily along the cooling manifold (the blower was then mounted at ground potential), and sometimes along the trigger-transformer or HV-supply cables. With the implementation of the HV deck and fiber optic link described above, the arcing problem has been eliminated at least up to the 200 kV limit of the power supply. The gun is now operated typically at 150 to 160 kV.

Two double fast pulsers have been built for the SLC gun (one is a spare). They perform in similar fashion. The maximum output of the gun operating at 150 kV when driven hard by one of the fast pulsers is about 9 A peak.[11] The pulsers have been adjusted to produce a pulse width of $\simeq$ 3 nsec under these conditions. Up to 60% of the charge in the

gun pulse can be compressed into a single S-band bunch with reasonable emittance.[1]

As the net drive is reduced, the width of the gun pulse is observed to decrease roughly in proportion to the reduction in the peak intensity. This is a useful feature for PEP and SPEAR beams, which require a gun pulse width of 1 to 2 nsec FWHM.

Pulser Bias

As originally designed, the input tube bias for each of the fast pulsers was provided through one of the analog channels of the fiber optic link already mentioned. Although this was adequate for dedicated SLC operation, it did not allow pulse-to-pulse changes in the gun output. Running non-SLC beams interlaced with SLC beams is highly desirable, especially during the developmental stage of the SLC.

The SLC timing system is the only source of the desired pulse-to-pulse beam code information.[12] The fast bias control utilizes the SLC timing system to start and stop a 14.875 MHz pulse train that is synchronized to the accelerating RF (and thus also to the SLC timing pulses). The pulse train is transmitted to the HV deck via a new optical fiber cable[13] where a 12-bit counter is used to count the pulses and store the result in a shift register. The output of the shift register drives a 12-bit DAC which produces an analog voltage that in turn is amplified to bias the pulser input tube. The amplifier on the HV deck takes about 500 μsec to settle, whereas for full DAC output the pulse train takes 275 μsec. Thus the SLC triggers – which cannot be adjusted to be earlier than 1 msec before the time of the associated beam pulse – are completely adequate to set the tube bias to any desired value (the desired value is selected by changing the offset of the timing pulse which stops the pulse train). At a future date it is hoped that beam-related fast digital signals can be sent directly to the HV deck using a modified version of the Camac pulsed amplitude unit (PAU) module being developed at SLAC.[14]

Jitter

Although the effect is mediated by the bunching process, the jitter in the timing of the gun pulse translates into energy jitter in the beam delivered to the dampling ring. The damping ring itself has a limited energy acceptance. The timing jitter of the fast gun pulse now has a σ of $\simeq$ 30 psec, which is at least a factor of two greater than the SLC requirement. Most of the observed jitter is associated with the fiber optic link for the pulser trigger. Some additional improvement in the link is possible; e.g., a 50 μ graded-index cable well-matched to a single-mode laser transmitter would help. The biasing for the receiver could also be improved. But a limitation to improvements of the link alone is that the SLC timing signal itself has a σ of $\simeq$ 20 psec for jitter and can be much worse.[12]

The present plan to reduce the jitter by a significant amount is to resynchronize the trigger on the HV deck. For this purpose the SHB RF will be brought up to the HV deck through a narrow bandpass circuit. Monitoring the jitter will be a little more difficult. One approach would be to use the signal from the gap monitor at the output of the gun to trigger a resonant circuit. The resonant circuit could be monitored with a standard SLC phase and amplitude detector (PAD).[15]

The intensity jitter in the beam adversely affects the dynamic beam loading in the linac after damping. The intensity jitter at the gun has a σ of $\simeq$ 0.5%.

Conclusion

The new pulser for the SLC thermionic gun produces on an interlaced basis all the types of gun pulses needed for the SLAC linac. The pulser has performed well during almost a year of continuous operation. The potential for significant improvements in the intensity, stability, and versatility of control for the fast pulsers is high.

References

1. J. E. Clendenin *et al.*, Proc. of the 1984 Linear Accelerator Conference, CSI-84-11 (1984), p. 457.
2. M. C. Ross *et al.*, "Generation and Acceleration of High Intensity Beams in the SLC Injector," this conference.
3. R. F. Koontz, Proc. of the 1981 Linear Accelerator Conference, LA-9234-C (1981), p. 62.
4. When operated with a filament voltage in the range of 7 to 8 V, the dispenser cathode lifetime exceeds one year of continuous operation. The gun vacuum varies between 2 and 5×10^{-9} Torr. The vacuum is roughed with cryopumps and maintained with ion pumps. The anode-electrode material is copper.
5. The SHB operates at the 16th sub-harmonic of the 2856 MHz accelerating RF of the linac.
6. A similar arrangement is being used in the CESR pulser. E. B. Blum *et al.*, Proc. of the XIIth International Conference on High-Energy Accelerators, FERMILAB (1983), p. 262.
7. The HFBR-0500 series snap-together fiber optic link is used.
8. R. F. Koontz *et al.*, "Commissioning and Operation of the Nuclear Physics Injector at SLAC," this conference.
9. If the need for a long-pulse pulser were eliminated, a clip line could be added at the gun cathode.
10. Z. D. Farkas *et al.*, Proc. of the IXth International Conference on High-Energy Accelerators, SLAC (1974), p. 576.
11. The maximum net drive at the gun cathode with minimum gun bias (50 V) is measured with a cathode probe (no high voltage) to be 180 V. As shown in Ref. 3, this is more than enough voltage to drive the gun into the temperature limited region. With a filament voltage of 7.75 V, the maximum current expected at 150 kV is 9 A.
12. L. Paffrath *et al.*, IEEE Trans. Nucl. Sci. **NS-32**, 84 (1985).
13. The HFBR-0200 series fiber optic link is used. It is about two times faster than the link in Ref. 7. The driver is located in a Camac module and the cable runs directly to the receiver on the HV deck.
14. R. E. Melen, IEEE Trans. Nucl. Sci. **NS-32**, 230 (1985).
15. H. D. Schwarz, "Computer Control of RF at SLAC," this conference.