IEEE Transactions on Nuclear Science, Vol. NS-26, No. 3, June 1979

IMPLICATIONS OF THE LOW FIELD LEVELS IN THE LEP MAGNETS

J.P. Gourber and L. Resegotti

Abstract

For the C-shaped laminated magnet cores, which have been adopted in the recent versions of LEP, advantage has been taken of the required low field levels to reduce the filling factor to less than one third. This both improves the performance and considerably reduces the price of the magnets. Starting from magnetic measurements on different steels, and by using a semi-quantitative model, it is shown that a satisfactory field uniformity can be maintained at an injection field of 0.017 T with a medium grade, low carbon steel, owing to the mutual compensation between the reduction in permeability with field level and the effect of coercivity.

A novel method is being developed for fabricating these magnets using a cement mortar to fill the interlamination spaces and bind the laminations together. A 60 cm long, ½-scale model has produced excellent mechanical and magnetic results.

1. Introduction

In e^+e^- machines of high energy, the guiding field must be kept relatively small in order to maintain the power radiated by the beam within reasonable limits. In the recent LEP version 8[1], this field varies between 0.0170 T, at the minimum possible injection energy of 18 GeV, and 0.1231 T, at the top energy of 130 GeV. In the design of the bending magnets, the magnetic saturation of the steel yoke is no longer a problem. The main difficulty arises at the lowest field level from the adverse effects on field quality of the coercive force and of the low permeability in the steel.

C-shaped cores, in which magnetic precision depends solely on precise stamping and stacking of steel laminations, have been adopted in the design studies of LEP[1,2] rather than the shaped-coil magnets proposed in a preliminary study[3]. In the LEP version 8 magnets, advantage has been taken of the low field levels to reduce the filling factor to 0.27, which both improves the performance and considerably reduces the price of the magnets. Figure 1 shows a magnet cross-section. The gap height (100 mm for LEP version 8) is determined by the space occupied by the vacuum chamber with its lead sheath and thermal insulation. The pole width and the shims are calculated so as to give a field uniformity better than $\Delta B/B = 10^{-4}$ across the aperture at the nominal energy. With a filling factor as small as 0.27, the return yoke width is still determined from structural requirements (gap closure $\leq 10\ \mu$m) rather than by magnetic saturation: the maximum induction in the steel at 130 GeV is lower than 1.6 T.

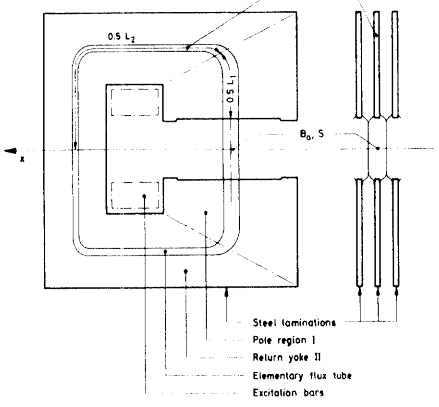

Fig. 1 Magnet Cross-section

2. Low-μ and Remanent Field Effects

The field quality in the gap and the uniformity between the magnets depend upon the characteristics B(H) of the steel which in turn varies with the magnetic history and particularly with the maximum induction, B_{max}. Table 1 gives the main results of measurements on rings made of three different types of steel. A suitably annealed low-carbon steel of medium grade, such as used for the ISR magnets, has been selected for the LEP magnets rather than a silicon steel since it has a lower coercivity. If the magnets are always cycled up to the maximum energy and if the current is then set from zero, the working points in the steel will always be on the rising branch of the hysteresis loops B(H), which can be approximated by

$$B = \mu(H + H_c) , \tag{1}$$

where the permeability μ is a function of H only and the coercive force of absolute value H_c a function of B_{max} (Table 1).

TABLE 1

Measurements of H_c (in A m^{-1}) on ring samples

	Low-carbon steel		Silicon steel PETRA[4]
	SPS	ISR	
H_c^{sat} a)	39.0	50.2	61.8
H_c for B_{max} b) = 0.7 T	31.2	40.7	50.7
= 0.4 T	24.4	32.0	40.2
= 0.25 T	19.4	26.1	33.6
= 0.1 T	13.6	17.8	22.2

a) is measured after full saturation of the steel;

b) is measured after complete demagnetization of the steel followed by several cycles $0 \rightarrow B_{max} \rightarrow 0$.

The magnet computing programs take into account the variation of μ as a function of the field but do not deal with the effect of H_c. Therefore, it is worthwhile considering the semi-quantitative model shown in Fig. 1. Starting from the flux conservation law $B\,s = B_a\,S$ and from the ampere law $\frac{B_a}{\mu_0} L_0 + \int_{steel} H\,d\ell = nI$ in an elementary flux tube and by using (1), one obtains for the induction in the gap:

$$B_a = \frac{\mu_0}{L_0}\left(nI + \int_{steel} H_c\,d\ell\right)\frac{1}{1 + \frac{S}{L_0}\int_{steel}\frac{d\ell}{\mu_r\,s}} , \tag{2}$$

where:

μ_0 is the vacuum permeability,
L_0 is the gap height,
S and s are the sections of the flux tube in the air and in the steel, respectively (Fig. 1),
$\mu_r = \frac{\mu}{\mu_0}$ is the steel permeability relative to air.

The central field $B_a\,(x = 0)$ can be calculated with a rather good approximation by extending the flux tube to the full magnet cross-section, so giving

$$B_a^{rem} = \frac{\mu_0}{L_0}\left(L_1\,H_{c1} + L_2\,H_{c2}\right) \tag{3}$$

for the remanent field in the gap. The subscripts 1 and 2 stand for the pole region I and the return yoke II, respectively. The lengths L_1 and L_2 are defined in Fig. 1.

ISR Division, CERN
CH-1211 Geneva 23

0018-9499/79/0600-3185$00.75 © 1979 IEEE

The difference in the flux path lengths in the steel is responsible for the field variation in the gap. The relative gradient resulting from the derivation of 2 can be approximated by assuming that only the pole region I contributes to the differential. This feature results from the concentration of the flux lines in the return yoke and is confirmed by experience. In these conditions, the gradient to field ratio can be written as follows:

$$\frac{1}{B_a}\left(\frac{dB_a}{dx}\right) = \left(\frac{H_{cl}}{nI} - \frac{1}{L_0\ f\ \mu_{rl}}\right)\frac{dL_l}{dx}\ , \qquad (4)$$

f being the steel filling factor.

The effects of H_{cl} and μ_{rl} on the field uniformity in the gap are small at the field level corresponding to the nominal energy and can be taken into account in the design of the pole profile. At low energy, these effects increase because of the reduction of nI and μ_{rl} but mutually compensate rather well as shown in the results of Fig. 2. These results have been deduced from measurements performed on a ½-scale model of the first LEP version magnets[2] with a steel filling factor of 1. For an injection energy of 15 GeV, the field uniformity was found quite sufficient for a good machine performance, the quadrupole and sextupole components being easily compensated by a modest excitation of the lattice quadrupole and sextupole magnets.

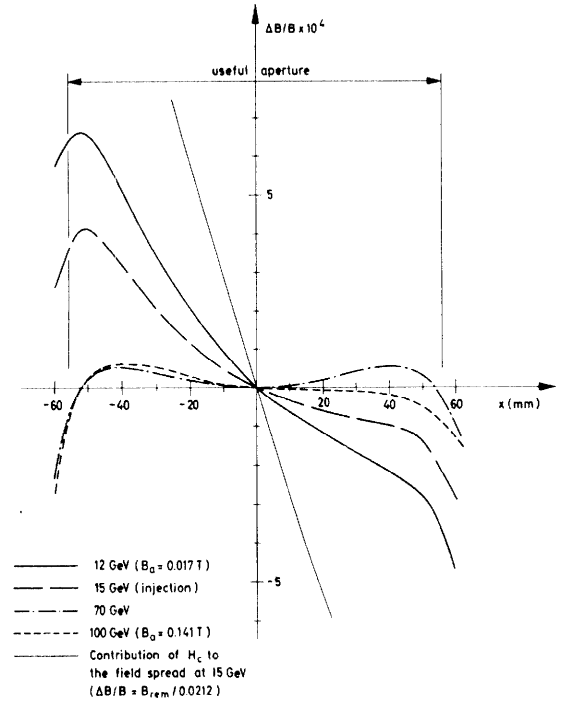

Fig. 2 Field Uniformity in the First LEP Version Magnets (f ≃ 1)

If the filling factor f is reduced, the values of induction in the pole, B and B_{max}, increase proportionally to 1/f resulting in an increase of H_{cl} and μ_{rl}. However, a good compensation between H_{cl}/nI and $1/L_0 f \mu_{rl}$ at low field is preserved, because μ_{rl} increases less than 1/f.

3. Steel - Concrete Magnet Cores

To take advantage of the reduced filling factor, both the material used to separate the laminations and the construction method have to be as cheap as possible. This has been realized with the steel - concrete cores, which have recently been proposed for LEP version 8 and of which a cross-section is shown in Fig. 3. The laminations are punched with indentations which serve to separate these laminations by 4 mm, so giving a filling factor of 0.27. The laminations are then stacked in a precision jig which forms part of a mould into which a cement mortar is poured. Six rods of 16 mm diameter passing through the laminations at the top and bottom are used to take the tensile stresses, as is usually done in a steel reinforced concrete beam. It is also foreseen to use these rods to exert a compressive prestress on the concrete in order to further increase the rigidity of the core and particularly its resistance to shear. This new technology is still under development at

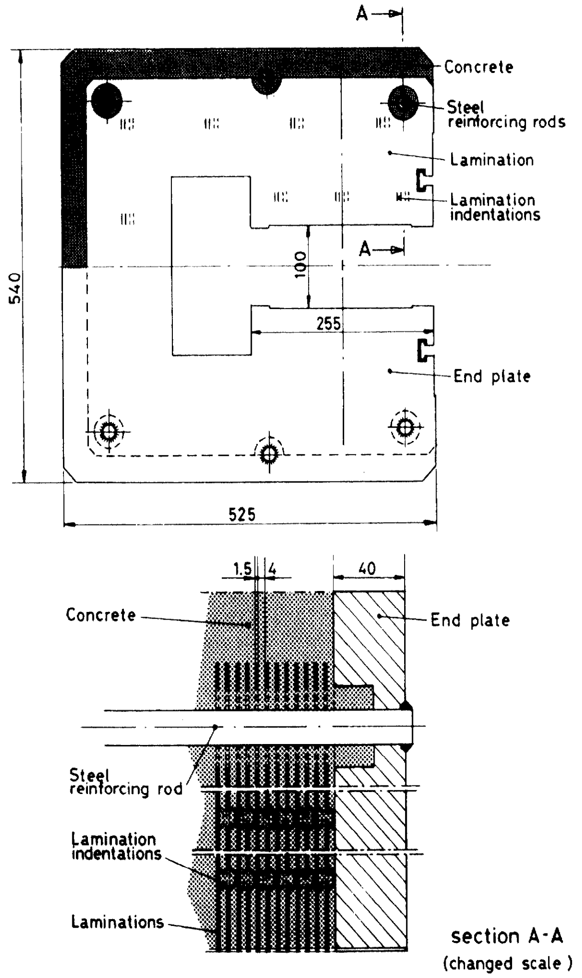

Fig. 3 Steel - Concrete Magnet Core

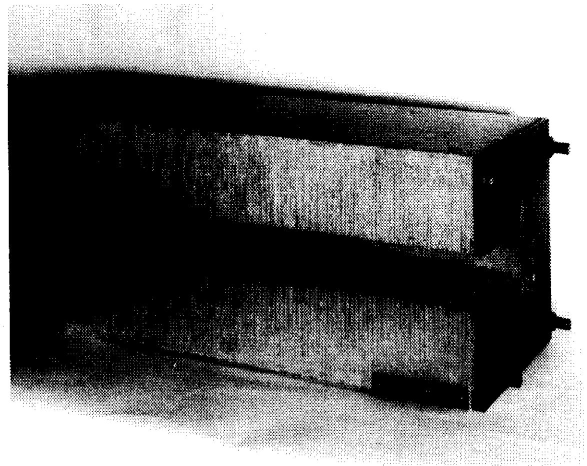

Fig. 4 ½-scale Model of a Steel - Concrete Magnet Core

CERN, but the first results obtained on a ½-scale model of 60 cm length are particularly encouraging. An ordinary Portland cement at a dose of 450 kg/m^3 has been used together with a fine grained silica sand (grain size 0 to 3 mm) and two additives to increase the fluidity and to reduce to a minimum the shrinkage on drying out. Although it was simply poured by gravity in a vibrating mould, the compactness and the penetration of the mortar in the 4 mm gaps between the laminations is rather good, as can be seen in Fig. 4. No compressive prestress was applied on the concrete by means of the four longitudinal rods. A longitudinal shrinkage on drying out of 1 ^{o}/oo was measured.

The mechanical stiffness in both torsion and flexion was measured after 28 days and found to be respectively six times and two times greater than those of the PETRA type[5,6] magnets proposed in the first LEP version. For the deformation produced by the core's own weight, a further gain by a factor 2 is due to the reduced core density. Because of the rigid bond created by the mortar, the magnet has a remarkably low stress-strain hysteresis; the twist remaining after a torsion test is six times smaller than for a conventional laminated core.

The field uniformity measurements scaled to a full size magnet are given in Fig. 5. The field variations across the aperture at 0.017 T are about the same as those measured in the first LEP version magnets (Fig. 2) and are well inside the machine requirements. No longitudinal variation of the field connected with the discontinuous core structure has been detected by moving a Hall plate of an active surface of 1.6 × 1.6 mm^2 either in the median plane or in a plane at 8 mm from the pole. Scaled to the full size magnet, this modulation is smaller than 10^{-3} in the vacuum aperture and will not disturb the beam.

In conclusion, our preliminary experience shows that this new technology may constitute an appreciable progress in the construction of low field magnet cores from the point of view of both quality and cost.

Acknowledgements

The authors would like to thank C. Wyss for many helpful discussions and S. Petri who gave a precious help in the realization of the first magnet model. Thanks are also due to many other technical people whose efforts have made the experimental work possible.

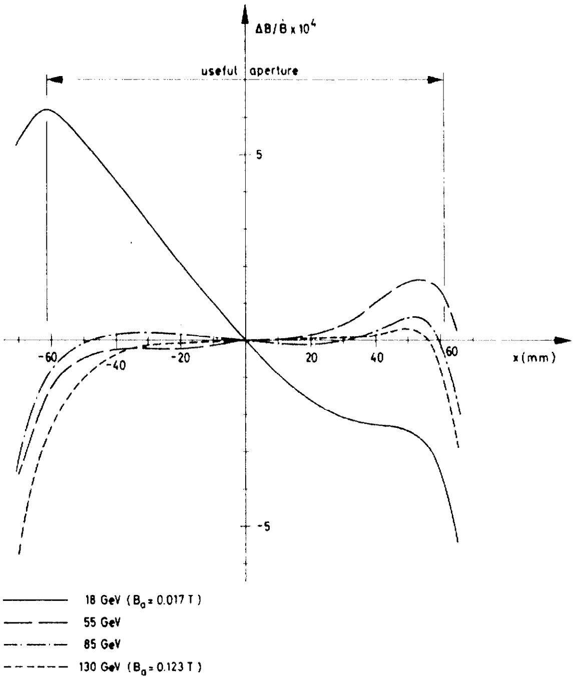

Fig. 5 Field Uniformity in the LEP Version 8 Steel - Concrete Magnets

References

1. W. Schnell, Design study of a large electron-positron colliding beam machine - LEP, Paper presented at this Conference.

2. The LEP Study Group, Design study of a 15 to 100 GeV e^+e^- colliding beam machine (LEP), Div. Report CERN ISR-LEP/78-17 (1978).

3. J.R.J. Bennett et al., Design concept for a 100 GeV e^+e^- storage ring (LEP), CERN Report 77-14 (1977).

4. G. Horlitz, DESY, Private communication.

5. G.A. Voss, The electron-positron storage ring PETRA, plans and status, IEEE Trans. Nculear Sci. NS-24, p. 1842 (1977).

6. H. Kaiser, DESY, Private communication.