ISBN: 978-3-95450-232-5 ISSN: 2673-7000 doi:10.18429/JACoW-NAPAC2022-WEPA30

Nb_3Sn COATING OF A 2.6 GHz SRF CAVITY BY SPUTTER DEPOSITION TECHNIQUE*

M. S. Shakel†, W. Cao, H. E. Elsayed-Ali, Md. N. Sayeed, Old Dominion University, Norfolk, VA
G. Eremeev, Fermi National Accelerator Laboratory, Batavia, IL, USA
U. Pudasaini, A. M. Valente-Feliciano
Thomas Jefferson National Accelerator Facility, Newport News, VA, USA

Abstract

Nb_3Sn is considered promising as a coating for superconducting radio frequency (SRF) cavities due to its high transition temperature T_c ~18.3 K and superheating field H_{sh} ~400 mT, almost twice that of Nb. A cylindrical DC magnetron sputtering system was built, commissioned, and used to deposit Nb_3Sn on the inner surface of a 2.6 GHz single-cell Nb SRF cavity. With two identical cylindrical magnetrons, this system can coat the cavity with high symmetry and uniform thickness. Using Nb-Sn multilayer sequential sputtering followed by annealing at 950 ºC for 3 h, Nb_3Sn films are first deposited at the equivalent positions of the cavity's beam tubes and the equator. The films' compositions and crystal structures are characterized by energy dispersive spectroscopy (EDS) and X-ray diffraction (XRD), respectively. The T_c of the films are measured by the four-point probe method and are observed to be 17.61 to 17.76 K. Based on these studies, ~1.2 µm thick Nb_3Sn is deposited inside a 2.6 GHz SRF Nb cavity. We discuss the first results from samples and cavity coatings and the operation of the cylindrical sputtering system.

INTRODUCTION

Compared to Nb SRF cavities, Nb cavities coated with Nb_3Sn can achieve high-quality factors at 4 K and can replace the bulk Nb cavities operated at 2 K, hence reducing the operation cost significantly [1-4].

One of the methods used to deposit Nb_3Sn coating on Nb SRF cavities is Sn vapor diffusion [5-7]. Magnetron sputtering is another promising method for Nb_3Sn coating as it provides better control over stoichiometry than the Sn diffusion process [8]. Magnetron sputtering is applied in several methods to grow Nb_3Sn: Depositing multilayers of Nb-Sn followed by annealing, from a single stoichiometric Nb_3Sn target, or by co-sputtering of Nb and Sn [9-13].

We have commissioned a cylindrical DC magnetron sputtering system at Old Dominion University to coat the inside surface of a 2.6 GHz Nb SRF cavity with Nb_3Sn. By applying multilayer sequential sputtering to deposit Nb-Sn layers using the two identical magnetrons followed by annealing, Nb_3Sn thin film is grown on Nb at the equivalent positions of the 2.6 GHz SRF cavity beam tubes and the equator.

* Supported by DOE, Office of Accelerator R&D and Production, Contact No. DE-SC0022284, with partial support by DOE, Office of Nuclear Physics DE-AC05-06OR23177, Early Career Award to G. Eremeev.
† mshak001@odu.edu

DESIGN OF CYLINDRICAL DC MAGNETRON SPUTTER COATER

The cylindrical magnetron sputtering system, schematically shown in Fig. 1, consists of the custom-designed high vacuum deposition chamber and two identical cylindrical magnetrons, designed and built by PLASMIONIQUE Inc. that can travel inside the cavity while depositing Nb or Sn.

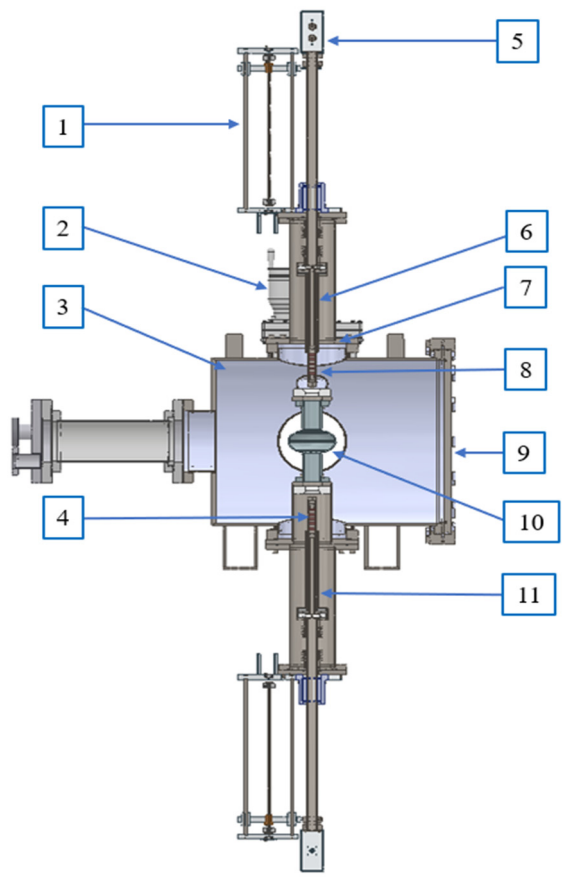

Figure 1: A sketch of the cylindrical DC magnetron sputtering system: (1) Magnetron movement controller shaft, (2) Gate valve, (3) Vacuum chamber, (4) Magnets, (5) Water flow controller, (6) Top magnetron, (7) 8'' ConFlat (CF) port of top magnetron, (8) Tube target, (9) Chamber door, (10) 2.6 GHz Nb SRF cavity, (11) Bottom magnetron; The magnetrons are made by PLASMIONIQUE Inc to fit an ODU custom chamber.

Content from this work may be used under the terms of the CC BY 4.0 licence (© 2022). Any distribution of this work must maintain attribution to the author(s), title of the work, publisher, and DOI

ISBN: 978-3-95450-232-5 ISSN: 2673-7000 doi:10.18429/JACoW-NAPAC2022-WEPA30

Content from this work may be used under the terms of the CC BY 4.0 licence (© 2022). Any distribution of this work must maintain attribution to the author(s), title of the work, publisher, and DOI

The coating chamber is designed to accommodate a 2.6 GHz TESLA-shaped cavity and two vertically positioned cylindrical magnetrons. The magnetrons are inserted into the chamber and placed on the axis of the cavity through two 8" CF flange ports, one from the top and the other from the bottom of the chamber.

Each cylindrical magnetron has 4 separate ring magnets made of neodymium (N55 grade) and coated with Ni, Cu, and epoxy. All magnets have the same diameter (OD 16 mm × ID 4 mm), though the two outer magnets are longer (7.74 mm) than the two middle magnets (6.35 mm). The magnetic field of these magnets creates 4 ring-shaped plasma formations around the target. Water-cooling through the magnetrons keeps the magnets cool.

Customized software is used to operate the associated devices connected with the cylindrical sputter system, including a communication device for magnetron selection, a motor control device for magnetron movement, and a DC power supply. The software can operate a deposition program and store readings of current, voltage, power, and water flow rate during deposition.

MAGNETRON OPERATION

The magnetron discharge operating conditions that produce stable and symmetric plasma for the Nb and Sn targets were identified. Individual tube targets of Nb and Sn with identical dimensions (0.9" OD × 0.8" ID × 4.5", 99.99% purity from ACI ALLOYS Inc.) were installed on the top magnetron and bottom magnetron, respectively. The chamber was pumped to ~8×10^{-8} Torr. Then, Ar was introduced at the 10 mTorr deposition pressure with a flow rate of 50 SCCM.

For a DC power of ≥18 W, symmetric plasma rings form around the Nb target. Fig. 2(a) shows stable plasma formation around the Nb target obtained at 30 W DC power. Two outer plasma rings are visibly more intense than the two weaker middle plasma rings.

Due to the much lower melting temperature of Sn (231.9 °C) compared to Nb (2469 °C) and its higher sputter yield, lower DC power is applied to the Sn target. Operating the Sn discharge at 8 W produces 4 plasma rings around the target; the outer 2 plasma rings are brighter than the 2 middle plasma rings, as visible in Fig. 2(b).

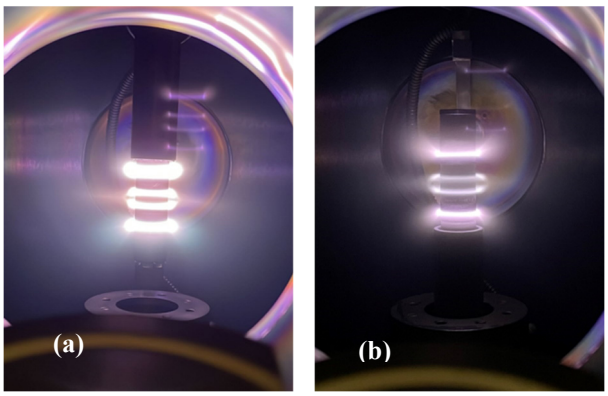

Figure 2: Plasma discharge using a DC power supply (a) Nb at 30 W, (b) Sn at 8 W.

MULTILAYER SEQUENTIAL SPUTTER DEPOSITION

A custom-made sample holder is used to mount 3 Nb substrates (10 × 10 × 3 mm^3) with the location of their surfaces replicating the inner surface of the 2.6 GHz Nb SRF cavity equator and irises. Nb and Sn are sputtered by applying 30 and 8 W DC power, respectively. For desired thicknesses of Nb and Sn, the speed of the magnetron movement and the number of scans are adjusted. A 200-nm thick Nb buffer layer is deposited on Nb substrate. Then, multi-layers of 25 nm thick Sn and 50 nm thick Nb are sequentially deposited. A total of 16 layers of Nb and Sn are deposited. For the 25 nm thick Sn layer, the Sn target travels across the deposition region once at a speed of 0.75 mm/s, and for the 50 nm thick Nb layer, the Nb target travels twice across the same region at a speed of 1 mm/s. The thickness of the films on the equator and the top and bottom beam tubes were 1200, 880, and 824 nm, respectively, as measured by a cross-sectional scanning electron microscope image. The samples are annealed at 950 °C for 3 h in a separate furnace with a temperature ramp rate of 12 °C/min.

RESULT AND DISCUSSION

The elemental compositions of Nb and Sn of the as-deposited and annealed samples are listed in Table 1. The as-deposited samples from the three positions have Sn atomic compositions of 25–33%. The annealed sample from the top beam tube position has an Sn composition of ~22%, while samples placed at the equator and bottom beam tube positions have ~19% Sn. This loss of Sn in the annealing process was observed before [8].

Table 1: Composition of Sn in As-deposited and Annealed Samples

Positions	Sn composition of as-deposited samples (at.%)	Sn composition of annealed samples (at.%)
Top beam tube	33	22
Equator	32	19
Bottom beam tube	25	19

The XRD patterns of the as-deposited and annealed samples are shown in Fig. 3. All three as-deposited samples show multiple Nb diffraction peaks ((110), (200), (211), (310)) coming from the substrates and the films. The top beam tube position sample shows several Sn diffraction peaks ((200), (101), (220), (211), (112), and (400)).

ISBN: 978-3-95450-232-5 ISSN: 2673-7000 doi:10.18429/JACoW-NAPAC2022-WEPA30

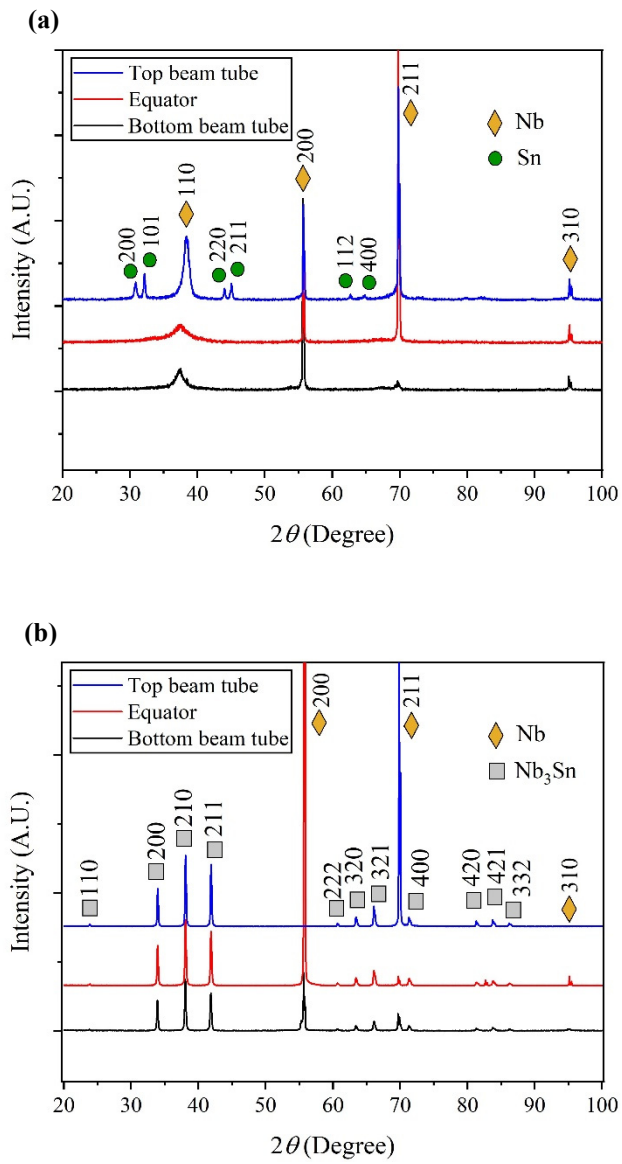

Figure 3: XRD patterns of (a) Nb-Sn as-deposited samples, (b) annealed Nb_3Sn samples.

The formation of Nb_3Sn after annealing is verified from the XRD patterns. Annealed samples from all three positions show several diffraction peaks corresponding to Nb_3Sn (110), (200), (210), (211), (222), (320), (321), (400), (420), (421), and (332). No diffraction peaks corresponding to Nb and other Nb-Sn intermetallic phases other than Nb_3Sn are observed, which confirms that the thin film is Nb_3Sn only. Several Nb peaks ((200), (211), (310)) are observed in the annealed films that are coming from the substrate.

The superconducting critical temperature transition width (ΔT_c) and residual resistivity ratio (RRR) of the annealed samples are measured by the four-point probe method down to 4 K [14]. Figure 4 shows the changes in resistivity with temperature and the inset image shows the superconducting transition region of the films.

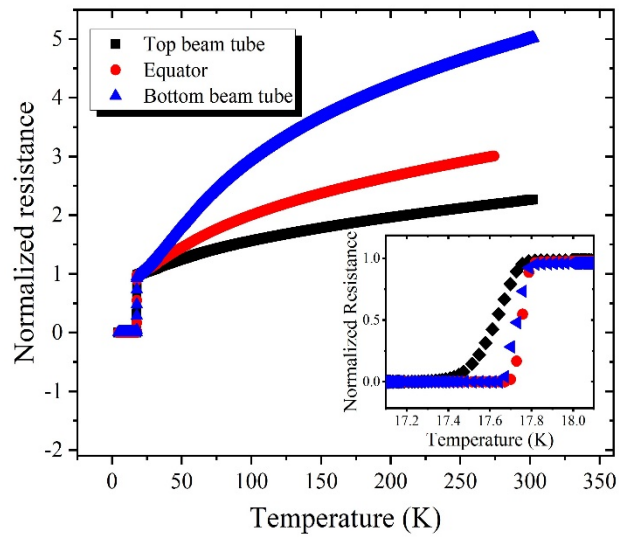

Figure 4: Sample resistance with temperature. Note that Nb_3Sn films were deposited on sapphire and the resistance was measured by a four-point probe method.

For all three samples, the Nb_3Sn films have T_c, ΔT_c, and RRR in Table 2. The highest T_c of 17.76 K and lowest ΔT_c of 0.06 K are observed for the film at the equator location.

Table 2: Superconducting Properties of the Nb_3Sn Films

Positions	T_c (K)	ΔT_c (K)	RRR
Top beam tube	17.61	0.24	2.26
Equator	17.76	0.06	3.00*
Bottom beam tube	17.73	0.1	5.01

* The RRR value for the sample at the equator position is measured from the ratio of the resistance at 275 K to that at 20 K. The other RRR value is measured from the ratio of resistance at 300 K to that at 20 K.

SUMMARY

We have commissioned a cylindrical DC magnetron sputtering system and used it to deposit Nb_3Sn films on flat samples at equivalent positions of equator and beam tubes of a 2.6 GHz Nb SRF cavity. The samples had T_c of 17.61–17.76 K and ΔT_c of 0.06–0.24 K. We have also coated an SRF cavity using the same conditions as used to coat the flat test samples. The cavity testing is in progress.

REFERENCES

[1] A. M. Valente-Feliciano, "Superconducting RF materials other than bulk niobium: a review", *Supercond. Sci. Technol.*, vol. 29, no. 11, p. 113002, Sep. 2016. doi:10.1088/0953-2048/29/11/113002

[2] S. Posen and D. L. Hall, "Nb_3Sn superconducting radiofrequency cavities: Fabrication, results, properties, and prospects", *Supercond. Sci. Technol.*, vol. 30, p. 033004, pp. 2017. doi:10.1088/1361-6668/30/3/033004

Content from this work may be used under the terms of the CC BY 4.0 licence (© 2022). Any distribution of this work must maintain attribution to the author(s), title of the work, publisher, and DOI

ISBN: 978-3-95450-232-5 ISSN: 2673-7000 doi:10.18429/JACoW-NAPAC2022-WEPA30

Content from this work may be used under the terms of the CC BY 4.0 licence (© 2022). Any distribution of this work must maintain attribution to the author(s), title of the work, publisher, and DOI

[3] U. Pudasaini, G. V. Eremeev, C. E. Reece, J. Tuggle, and M. J. Kelley, "Initial growth of tin on niobium for vapor diffusion coating of Nb_3Sn", *Supercond. Sci. Technol.*, vol. 32, p. 045008, Mar. 2019. doi:10.1088/1361-6668/aafa88

[4] U. Pudasaini *et al.*, "Recent Results From Nb_3Sn Single Cell Cavities Coated at Jefferson Lab", in *Proc. SRF'19*, Dresden, Germany, Jun.-Jul. 2019, pp. 65-70. doi:10.18429/JACoW-SRF2019-MOP018

[5] G. Eremeev *et al.*, "Nb_3Sn multicell cavity coating system at Jefferson Lab", *Rev. Sci. Instrum.*, vol. 91, no. 7, Jul. 2020. doi: 10.1063/1.5144490

[6] S. Posen *et al.*, "Nb_3Sn at Fermilab: Exploring Performance", in *Proc. SRF'19*, Dresden, Germany, Jun.-Jul. 2019, pp. 818-822. doi:10.18429/JACoW-SRF2019-THFUB1

[7] S. Posen, M. Liepe, D.L. Hall, "Proof-of-principle demonstration of Nb_3Sn superconducting radiofrequency cavities for high Q0 applications, *Appl. Phys. Lett.*, vol. 106, no. 8, Feb. 201. doi:10.1063/1.4913247

[8] M. N. Sayeed, U. Pudasaini, C. E. Reece, G. V. Eremeev, and H. E. Elsayed-Ali, "Effect of layer thickness on structural, morphological and superconducting properties of Nb_3Sn films fabricated by multilayer sequential sputtering," in IOP Conf. Ser.: Mater. Sci. Eng., Jun. 2020, vol. 756, p. 012014. doi: 10.1088/1757-899X/756/1/012014

[9] Md. N. Sayeed *et al.*, "Deposition of Nb_3Sn Films by Multilayer Sequential Sputtering for SRF Cavity Application", in *Proc. SRF'19*, Dresden, Germany, Jun.-Jul. 2019, pp. 637-641. doi:10.18429/JACoW-SRF2019-TUP079

[10] E. A. Ilyina *et al.*, "Development of sputtered Nb_3Sn films on copper substrates for superconducting radiofrequency applications," *Supercond. Sci. Technol.*, vol. 32, no. 3, 2019. doi:10.1088/1361-6668/aaf61f

[11] M. N. Sayeed, U. Pudasaini, C. E. Reece, G. V. Eremeev, and H. E. Elsayed-Ali, "Properties of Nb_3Sn films fabricated by magnetron sputtering from a single target", *Appl. Surf. Sci.*, vol. 541, pp. 148528, Mar. 2020. doi: 10.1016/j.apsusc.2020.148528

[12] R. Valizadeh *et al.*, "PVD Depostion of Nb_3Sn Thin Film on Copper Substrate from an Alloy Nb_3Sn Target", in *Proc. IPAC'19*, Melbourne, Australia, May 2019, pp. 2818-2821. doi:10.18429/JACoW-IPAC2019-WEPRB011

[13] C. Sundahl, "Synthesis of Superconducting Nb_3Sn Thin Film Heterostructures for the Study of High-Energy RF Physics, PhD Dissertation, University of Wisconsin-Madison, Wisconsin, USA, 2019.

[14] J J. K. Spradlin, C. E. Reece, and A-M. Valente-Feliciano, "A Multi-Sample Residual Resistivity Ratio System for High Quality Superconductor Measurements", in *Proc. SRF'15*, Whistler, Canada, Sep. 2015, paper TUPB063, pp. 726-730. 1