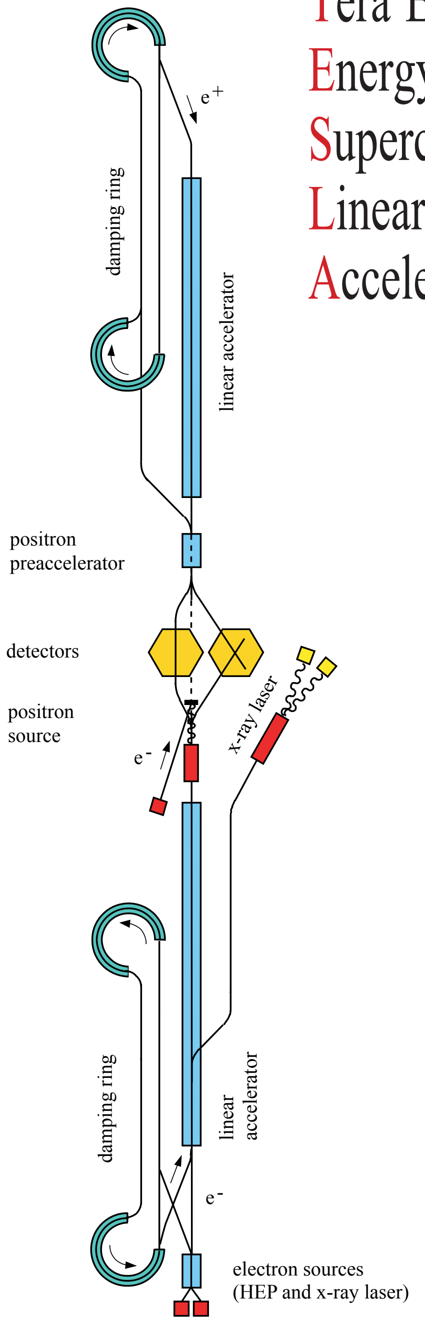

Tera Electron Volt
Energy
Superconducting
Linear
Accelerator

Review of Superconducting -vs- Normal-Conducting Accelerator Systems for Linear Colliders

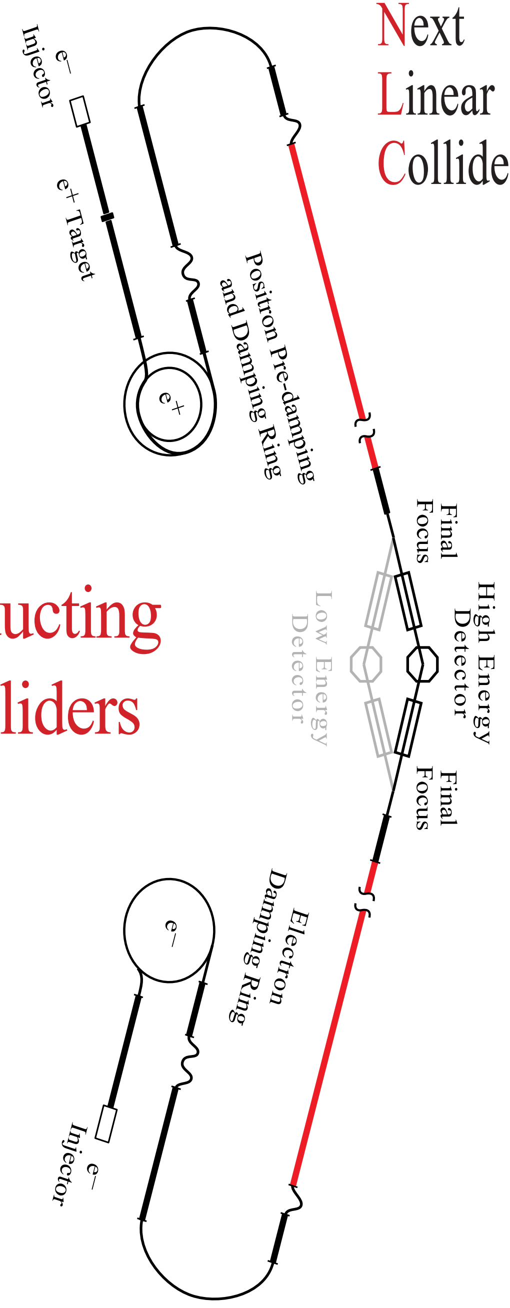

Next
Linear
Collider

Chris Adolphsen

Luminosity ($\mathcal{L}$) and Beam Power (P_{beam})

For NLC & TESLA, $\mathcal{L}$ Scales Approximately as

$$\mathcal{L} \sim P_{beam} / (\varepsilon_y)^{1/2}$$

where

ε_y = Normalized Vertical Emittance at IP

P_{beam} = Linac Wall Plug Power (Limited to a Few 100 MW)
× AC -to- Beam Efficiency (Function of RF Technology)

= N_e: Number of e^+/e^- per Bunch
× N_b: Number of Bunches Per Pulse
× f_{rep}: Pulse Repetition Rate
× E_b: Final Beam Energy

Linear Collider RF Technologies

- Normal-Conducting RF Accelerator Structures
  - Want high RF frequency to be efficient with lower RF energy per pulse (thus fewer rf components) and higher gradient (thus a shorter linac).
    - Downside is higher wakefields and thus tighter alignment tolerances.
  - NLC/JLC uses 11.4 GHz RF (X-Band), 4 times the SLAC Linac frequency.
    - NLC cost is optimum with an unloaded gradient of 70 MV/m.
  - CLIC uses 30 GHz RF.
    - The 3 TeV collider design requires 170 MV/m unloaded gradient.
- Super-Conducting RF Accelerator Cavities
  - Exploit low cavity losses to deliver energy to beam efficiently and slowly, so less expensive, low peak power sources can be used.
    - Downside is the large damping rings required for the long bunch trains.
  - TESLA operates at 1.3 GHz based on surface resistance – cavity size tradeoff.
    - Design gradient of 23 MV/m based on initial goal: cost optimum higher.

NLC/JLC Rounded Damped-Detuned Structure (RDDS)

RDDS Cutaway View
Showing 8 of 206 Cells

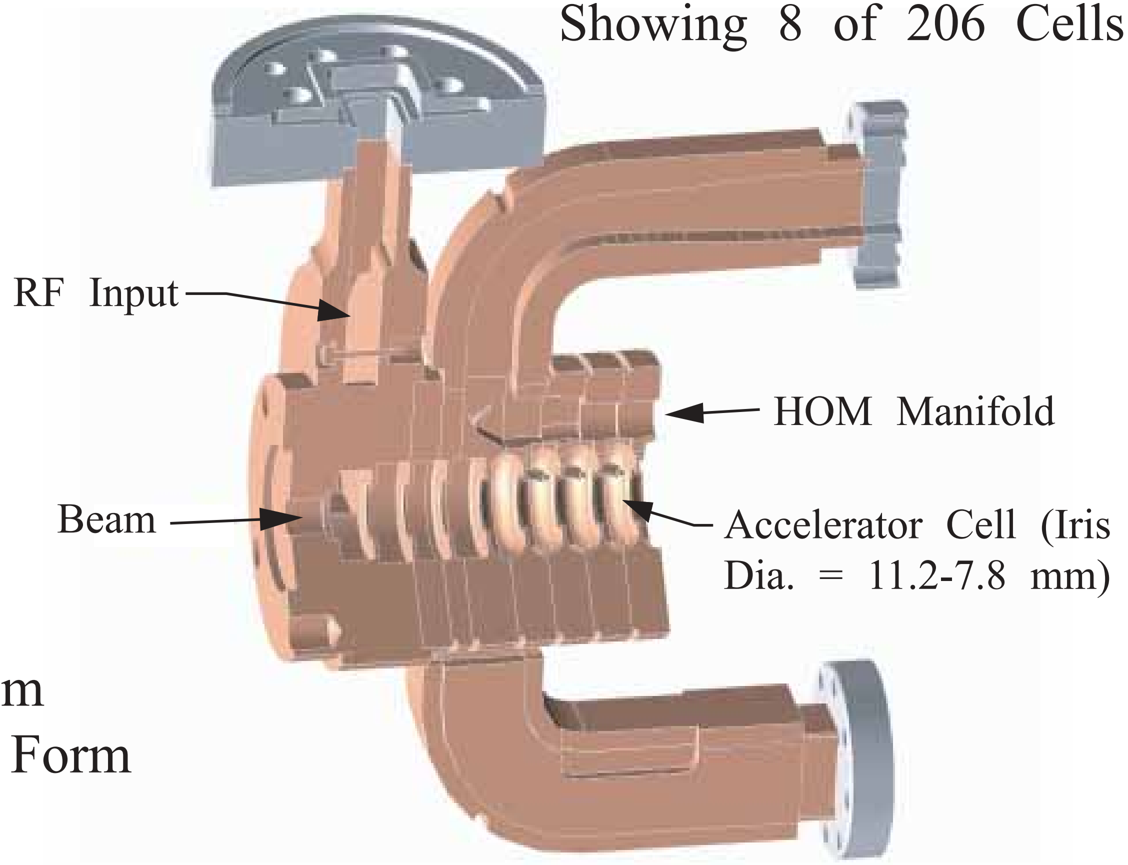

- Made with Class 1 OFE Copper.
- Cells are Precision Machined (Few μm Tolerances) and Diffusion Bonded to Form Structures.
- 1.8 m Length Chosen so Fill Time ≈ Attenuation Time ≈ 100 ns.
- Operated at 45 °C with Water Cooling. RF Losses are about 3 kW/m.
- RF Ramped During Fill to Compensate Beam Loading (21%). In Steady State, 50% of the 170 MW Input Power goes into the Beam.

Two RDDS Cells

TESLA Cavities

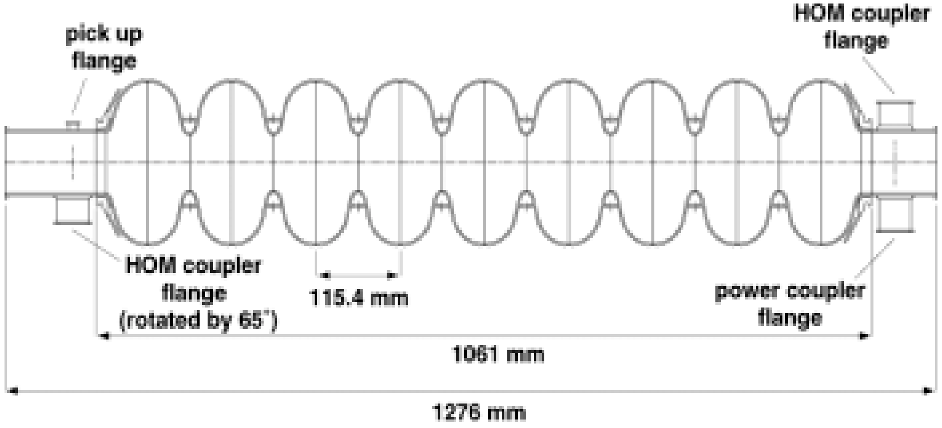

- Made with Solid, Pure Niobium (Weak Flux Pinning)
- Nb Sheets are Deep-Drawn to Make Cups, which are E-Beam Welded to Form Cavities.
- Cavity Limited to Nine Cells (1 m Long) to Reduce Trapped Modes, Input Coupler Power Losses and Sensitivity to Frequency Errors.
- Operated at 1.8-2 K in Superfluid He Bath (Surface Resistance Very Sensitive to Contaminates and Temperature: Increases 50 fold at 4.2 K). RF losses ($Q_0 \approx 10^{10}$) are ≈ 1 W/m.
- Q_{ext} Adjusted to Match Beam Loading ($Q_{beam} \approx 3 \times 10^{6}$). In Steady State, Essentially 100% of the 230 kW Input Power Goes into the Beam.
  - ↳ Cavity Fill Time = 420 μs.

Simplified RF System Layout

(NLC vs TESLA Efficiencies and Average Power)

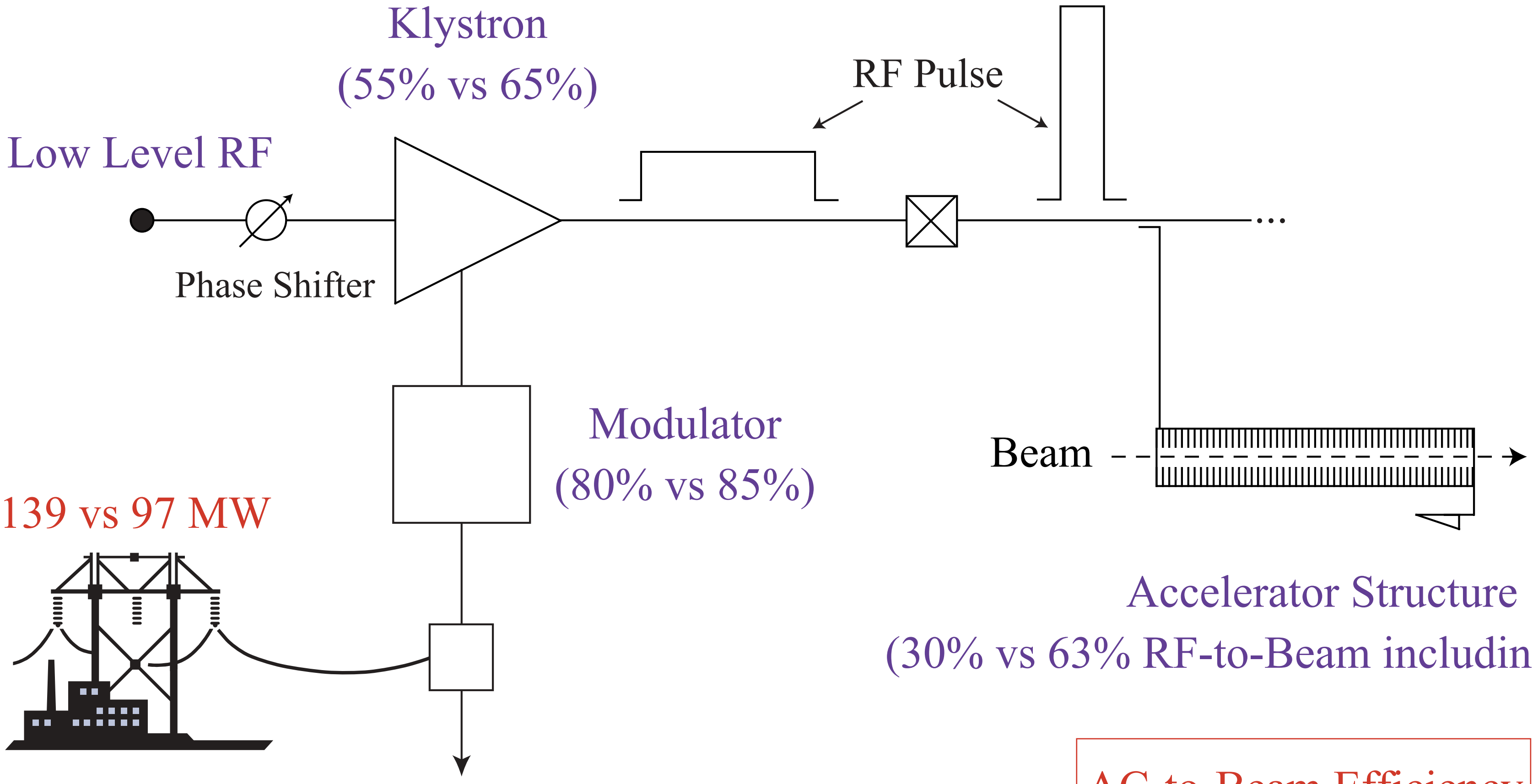

RF Distribution (Compression in NLC Only)
(85% vs 94%)

Klystron
(55% vs 65%)

Low Level RF

Phase Shifter

RF Pulse

Modulator
(80% vs 85%)

139 vs 97 MW

Beam

13 vs 23 MW

Accelerator Structure
(30% vs 63% RF-to-Beam including Overhead)

Cooling (15 vs 21 MW)
&
Other (3 vs 8 MW)

AC-to-Beam Efficiency
NLC: 10%
TESLA: 24%

NLC Linac RF Unit

Low Level RF System

One 490 kV 3-Turn Induction Modulator

Eight 2 KW TWT Klystron Drivers (not shown)

Eight 75 MW PPM Klystrons

Delay Line Distribution System (2 Mode, 4 Lines)

Eight Accelerator Structure Sextets

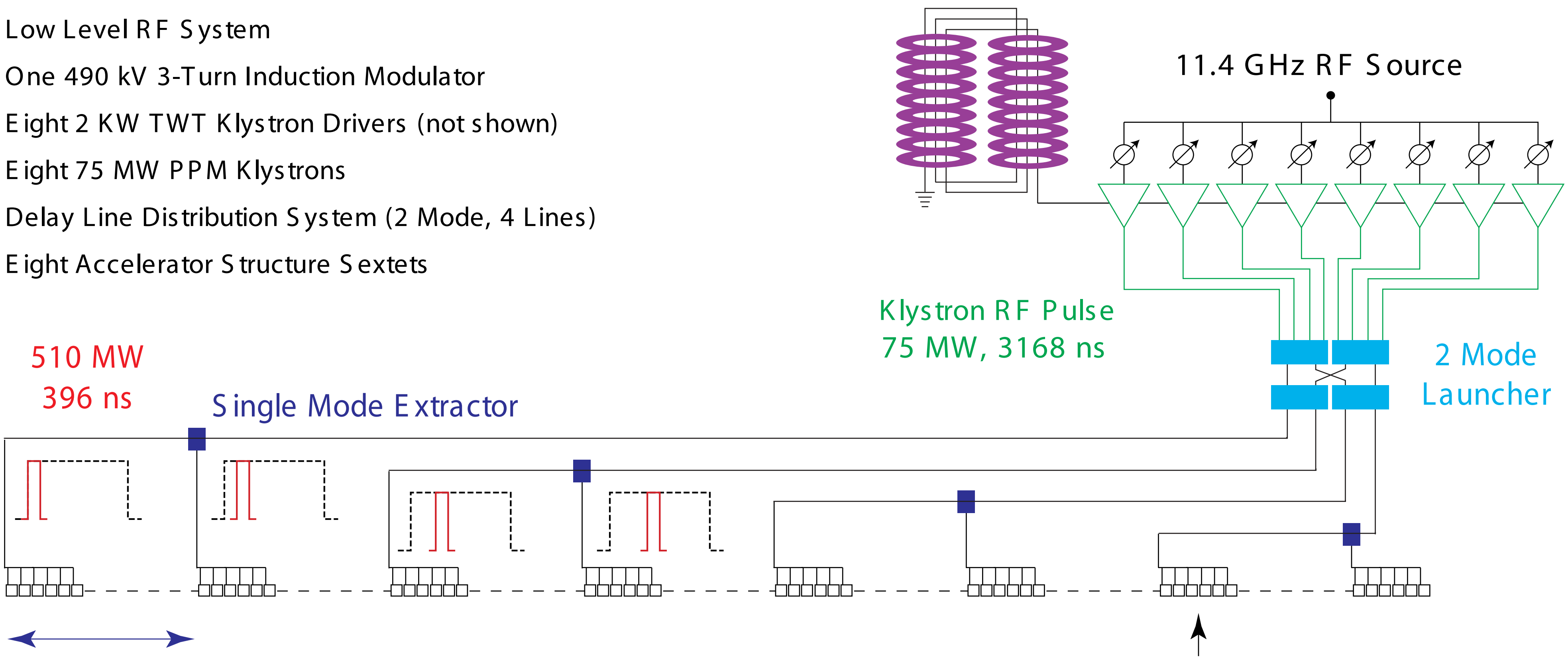

Induction Modulator

11.4 GHz RF Source

Klystron RF Pulse
75 MW, 3168 ns

2 Mode
Launcher

510 MW
396 ns

Single Mode Extractor

58.6 m

Beam Direction →

Six 0.9 m Accelerator Structures
(85 MW, 396 ns Input Each)

Linac Tunnel
(4.3 m ID)

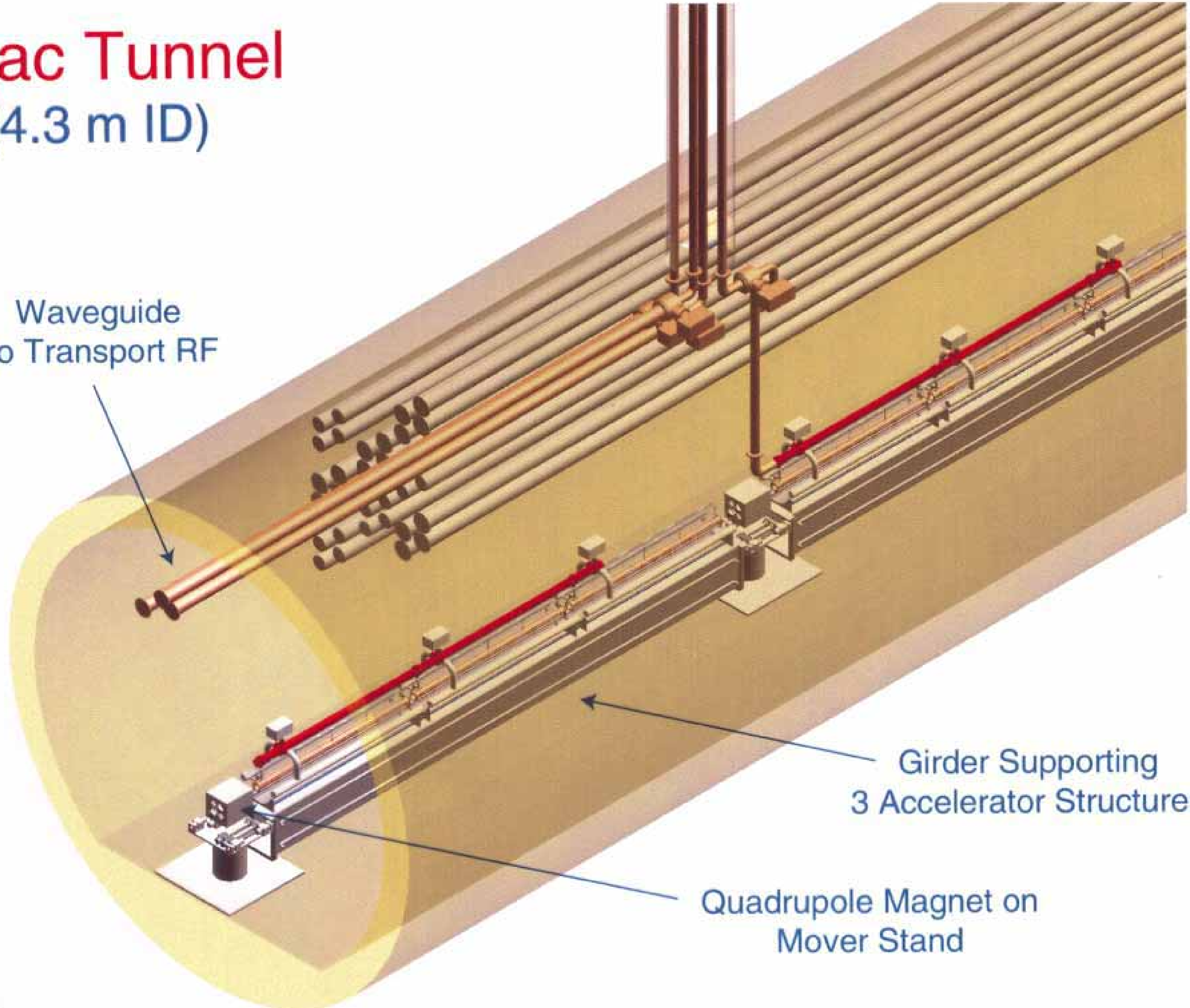

TESLA RF Station: One Klystron Feeds Three Cryomodules Each Containing Twelve, Nine-Cell Cavities

Length = 50 m, Filling Fraction with Quads = 75%

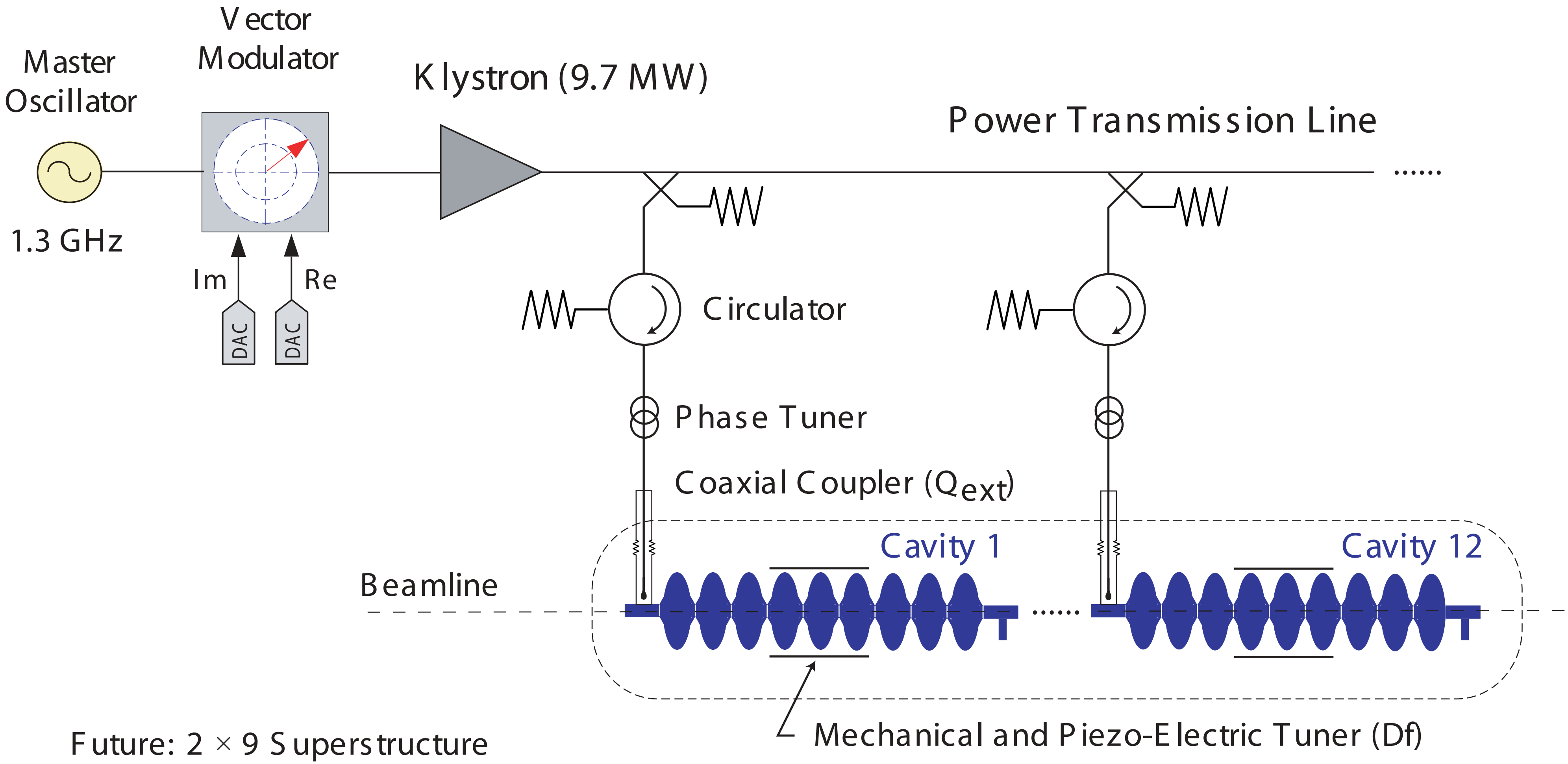

Master Oscillator

1.3 GHz

Vector Modulator

Im

Re

DAC

DAC

Klystron (9.7 MW)

Power Transmission Line

......

Circulator

Phase Tuner

Coaxial Coupler (Q_{ext})

Cavity 1

Cavity 12

Beamline

......

Mechanical and Piezo-Electric Tuner (Df)

Cryomodule 1 of 3

Future: 2 × 9 Superstructure
One Feed per Pair, 6 % Shorter

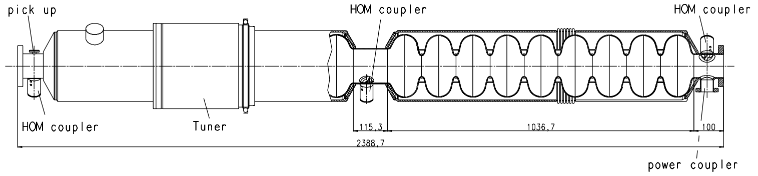

TESLA Tunnel

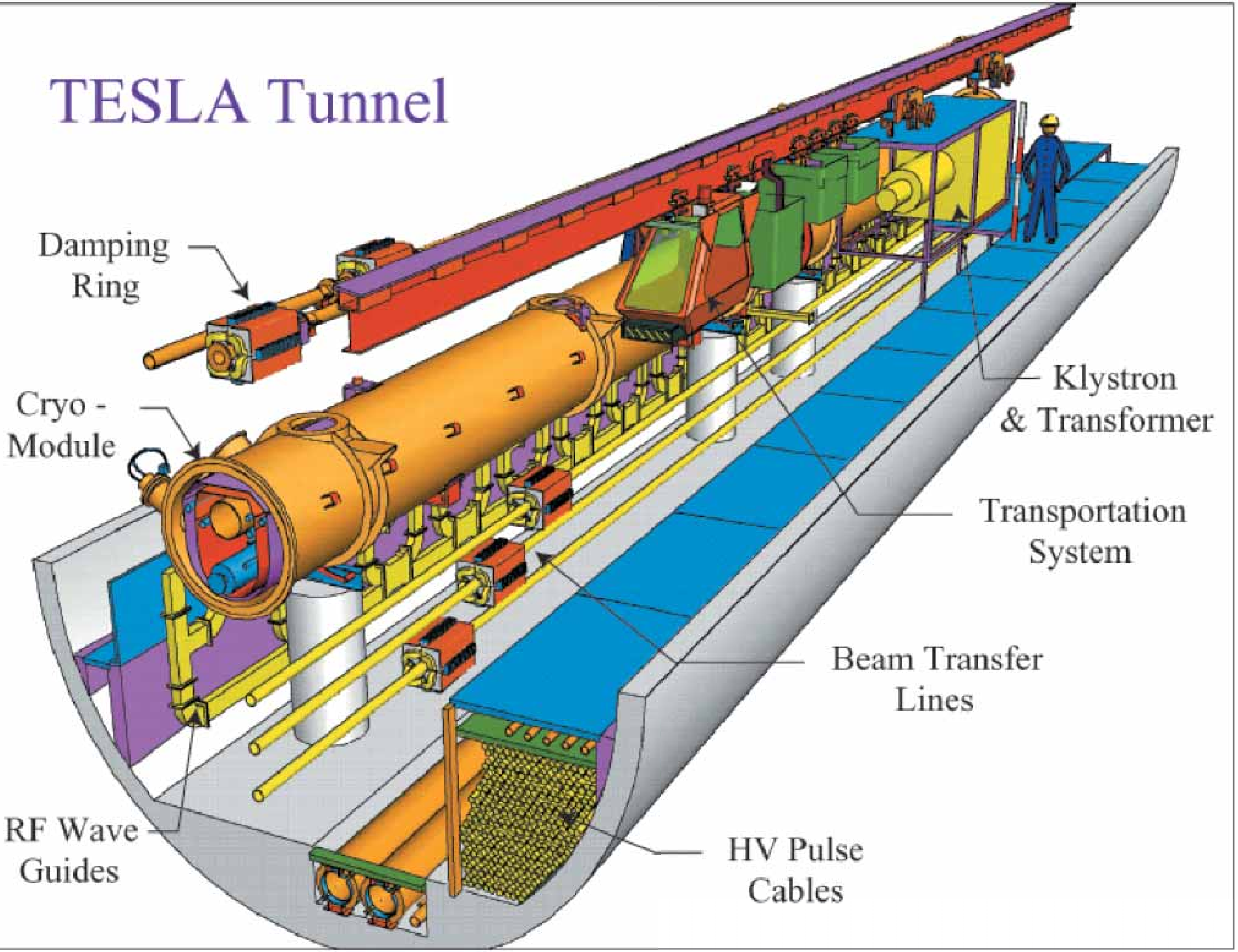

Damping Ring

Cryo - Module

Klystron & Transformer

Transportation System

Beam Transfer Lines

RF Wave Guides

HV Pulse Cables

30 GHz RF Power Source for the CLIC 3 TeV Collider

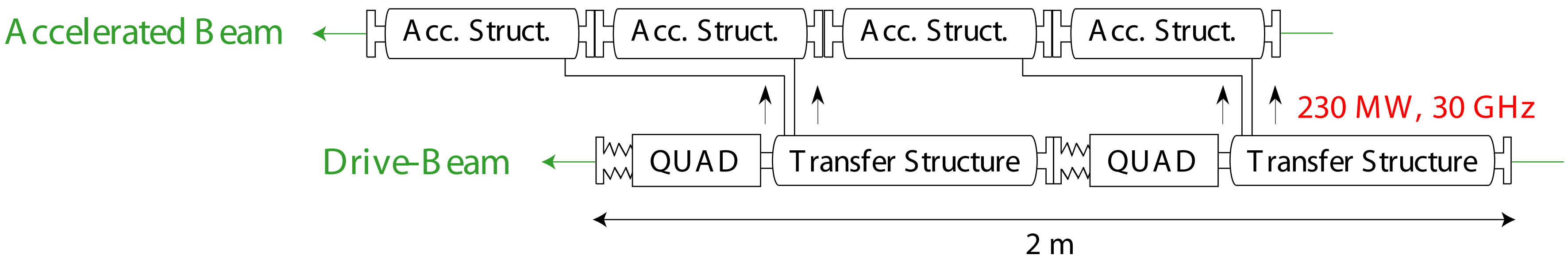

300 MW AC Power

9.8% AC to Beam Efficiency

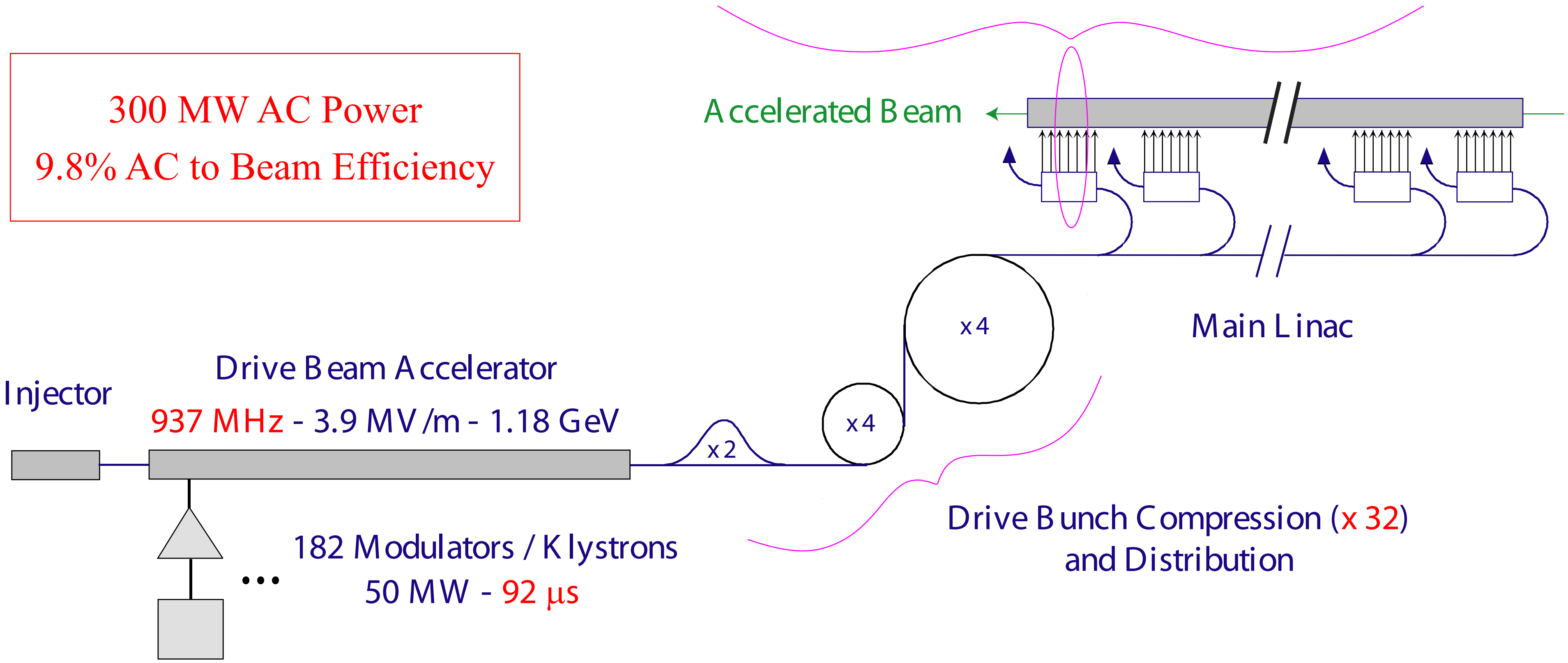

Main Linac

Injector

Drive Beam Accelerator

937 MHz - 3.9 MV/m - 1.18 GeV

182 Modulators / Klystrons

50 MW - 92 μs

Drive Bunch Compression (x 32)
and Distribution

X-Band (11.4 GHz) KLYSTRONS

Solenoid Focused Tubes: Have
Ten, 50 MW Tubes for Testing,
However Solenoid Power = 25 kW.

Developing Periodic Permanent Magnet (PPM)
Focused Tubes to Eliminate the
Power Consuming Solenoid.

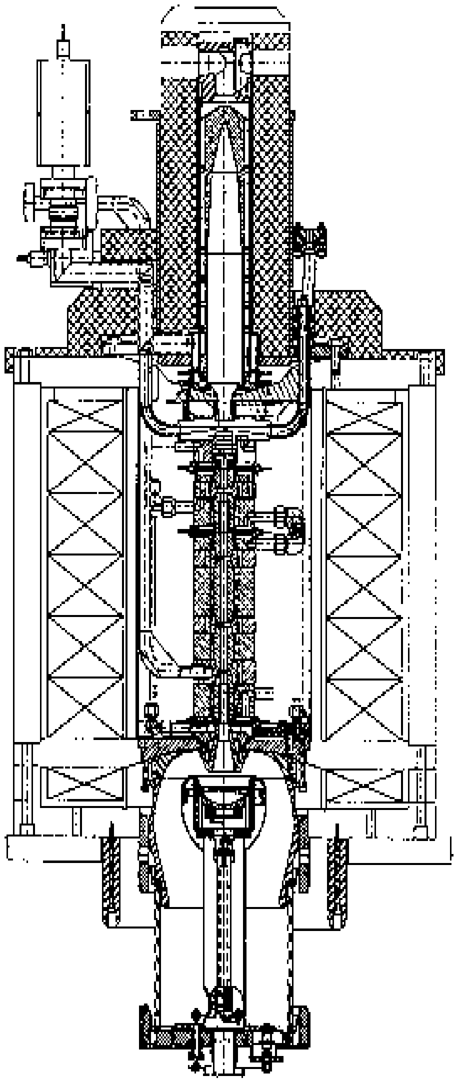

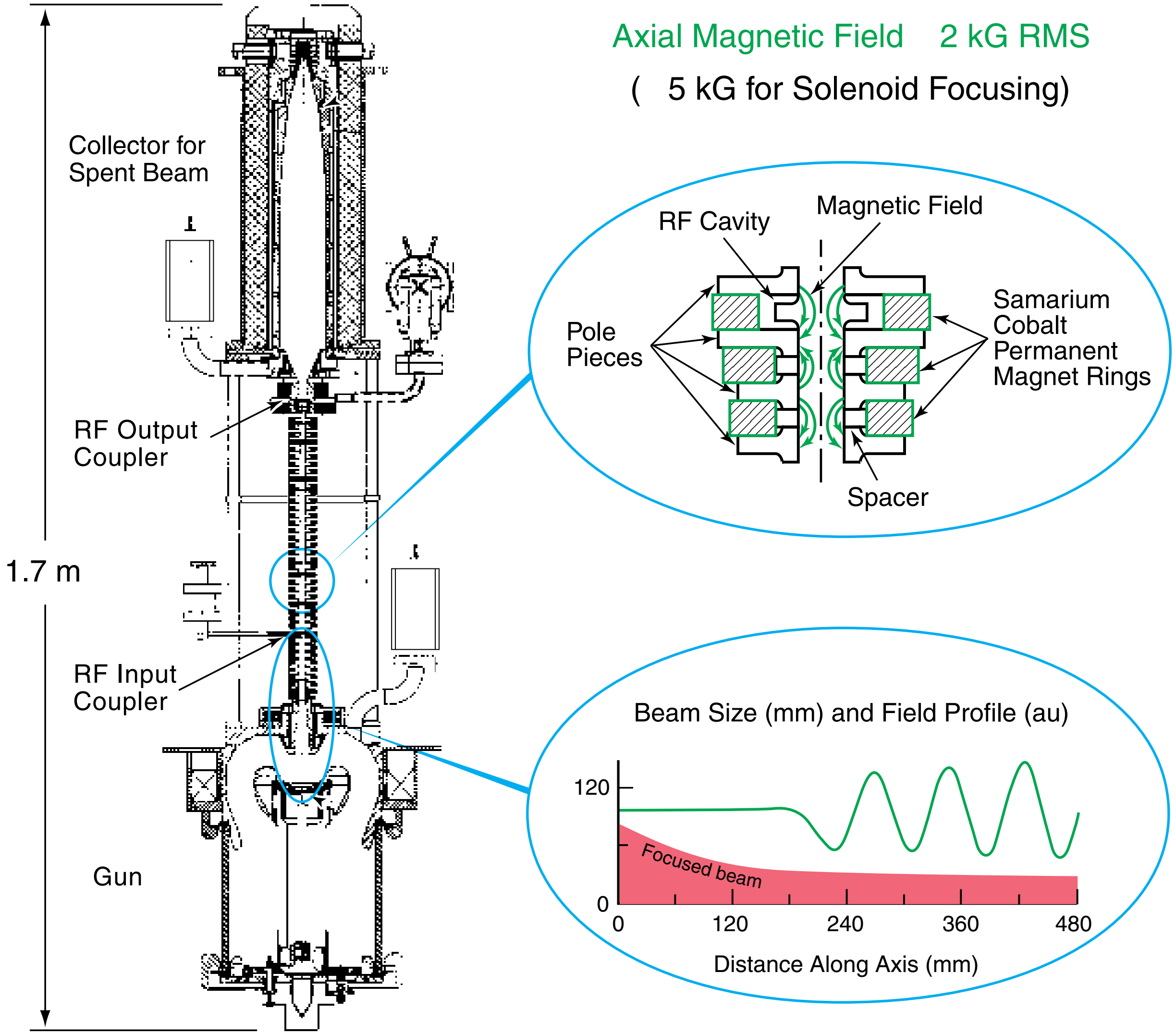

Axial Magnetic Field   2 kG RMS

(5 kG for Solenoid Focusing)

SLAC 75 MW PPM Klystron Program

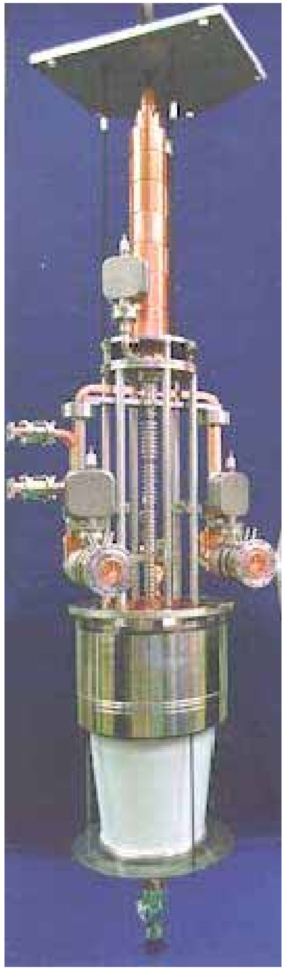

XP1: After a Number of Fixes, Achieved Stable Performance over 70 MW at 3 μs, Limited by the Modulator.

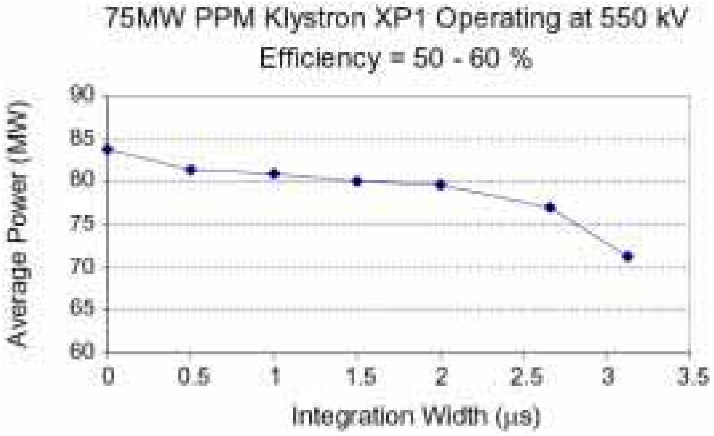

XP3: Next Generation Tube Designed for Manufacturability

- Diode Version (No RF Cavities) Has Been Successfully Tested.
- First Two Klystrons Have Not Performed Well.
  - Will Autopsy and Rebuild Them

Long Term: Sheet Beam Klystron

- Lower Cost.
- Well-Suited for Gridded Gun, Which Would Simplify the Modulator.

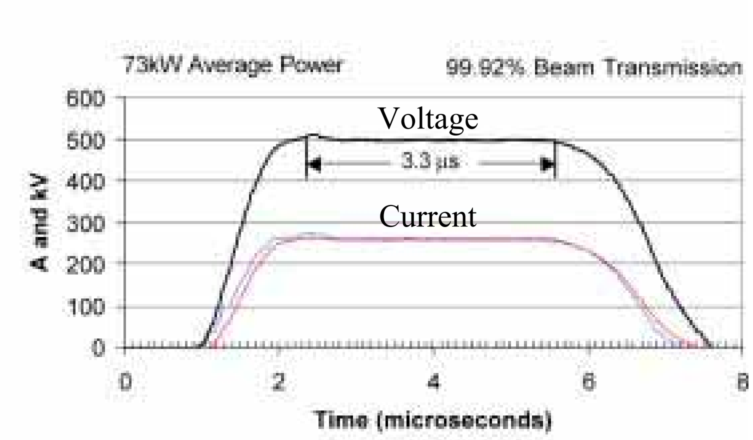

KEK X-Band Klystron Program

- KEK is working with Toshiba to develop PPM tubes as well - the JLC RF system design requires only 1.5 μs long klystron pulses.
- Most recent 75 MW tube (PPM-2) basically meets design goals, but full power testing was limited by the modulator.

PPM-2:	Design	Achieved
Peak power	75 MW	75.1 MW at 505 kV
Efficiency	55%	56%
Pulse width	1.5 μs	1.4 μs at 74 MW
		1.5 μs at 70 MW
Repetition rate	150 Hz	25 Hz

- Developing new tubes with goals of 60% efficiency (PPM-3: starting test) and easier manufacturability (PPM-4: in design).
- Also working on a 150 MW multi-beam klystron.

TESLA Klystron Development

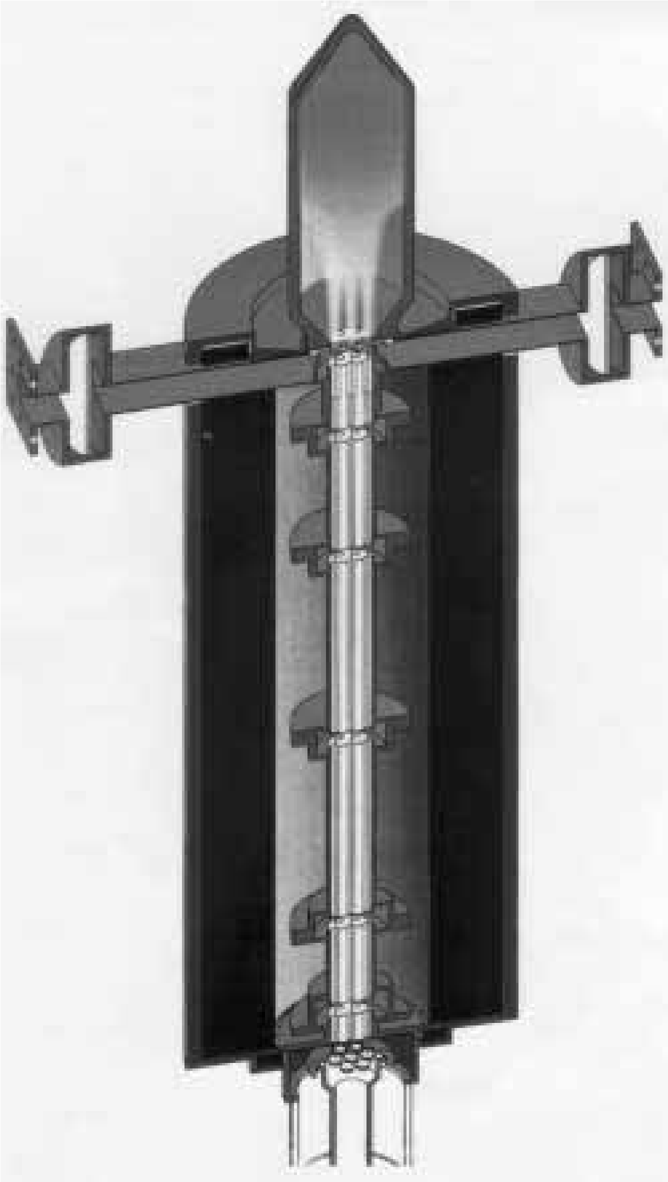

GOAL

Reduce HV Requirements
and Improve Efficiency
(Lower Space Charge)
with
Multiple Beam Klystron

Use Seven 18.6 A, 110 kV
Beams to Produce 10 MW
with a 70% Efficiency

Thales TH1801
MultiBeam Klystron

Spec's:
10 MW, 10 Hz, 1.5 ms
with 4 kW Solenoid Power

First Tube Achieved 65%
Efficiency at 1.5 ms, 5 Hz and
Was Used in TTF

Photo of TH1801 Tube
(top) and Cathode (bottom)

INDUCTION MODULATOR :

SUM MANY LOW VOLTAGE (~ 2 kV) SOURCES INDUCTIVELY

INDUCTION CIRCUIT (1 OF N)

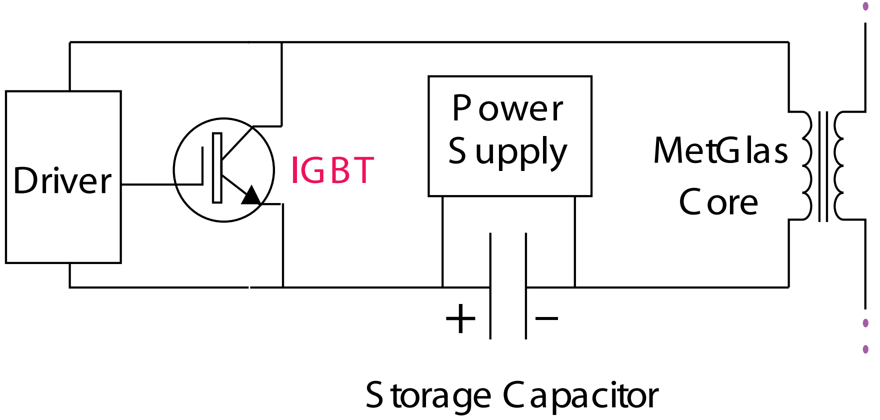

10 Core Test: 22 kV, 6 kA, 3 μs Pulses

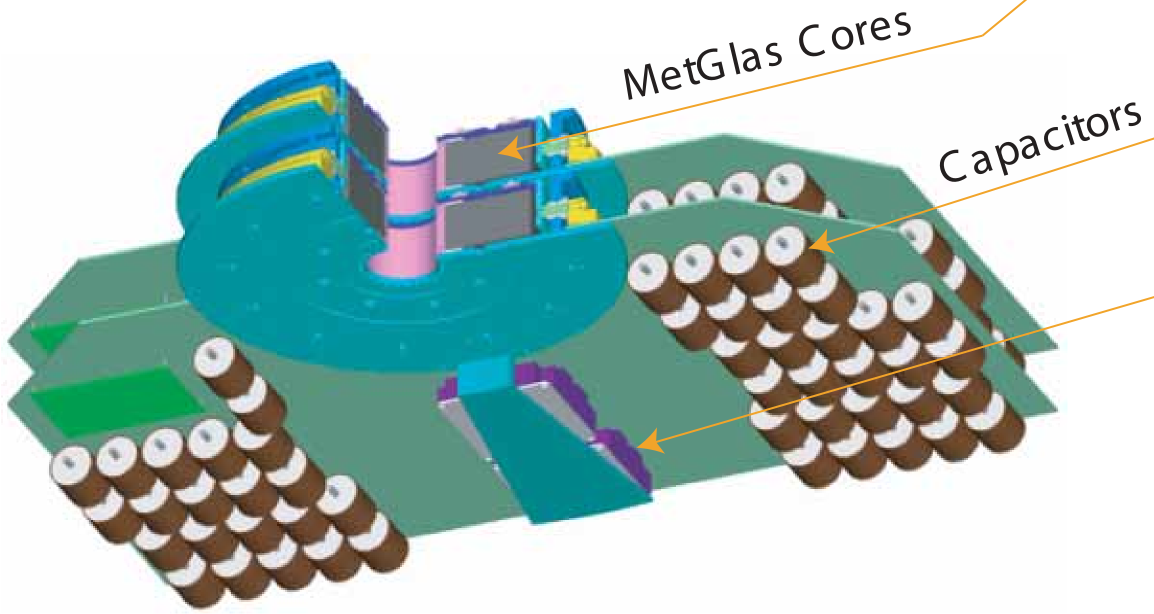

Insulated Gate Bipolar Transistors

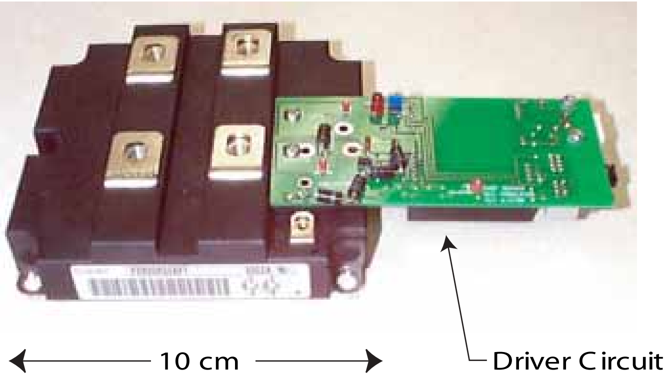

SLAC / LLNL / Bechtel NV

NLC Eight Klystron Induction Modulator

(1 GW Pulsed Power)

Drive 8 Klystrons with a 500 kV, 2 kA, 3 µs Pulse Generated from 76, 2.2 kV Induction Cores Summed Through a 3-Turn Secondary.

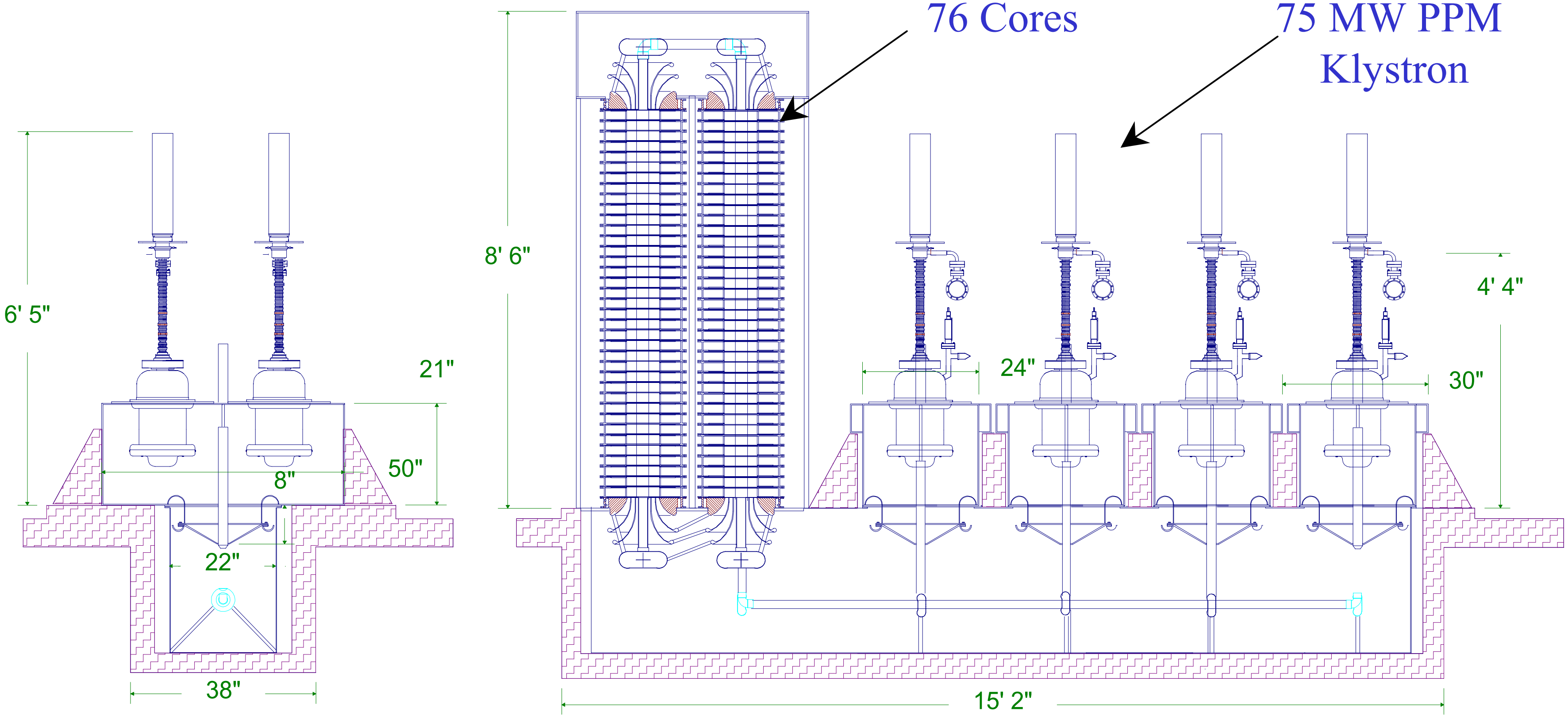

76 Cores

75 MW PPM Klystron

Induction Modulator Prototype

5045 S-Band Klystron
Used for Testing

Water Load

Results with a Water Load
(500 kV, 600 A)

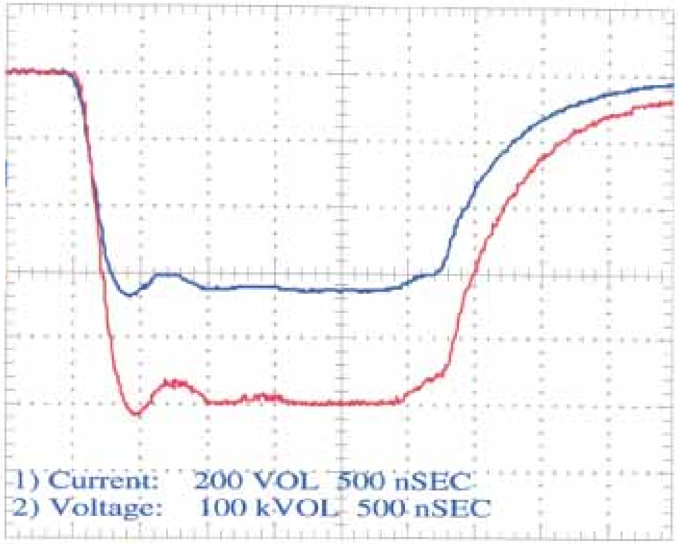

TESLA Modulator

Use FNAL Design in Which a Bouncer Circuit Offsets the Voltage Droop (19%) During Discharge of a Capacitor Bank

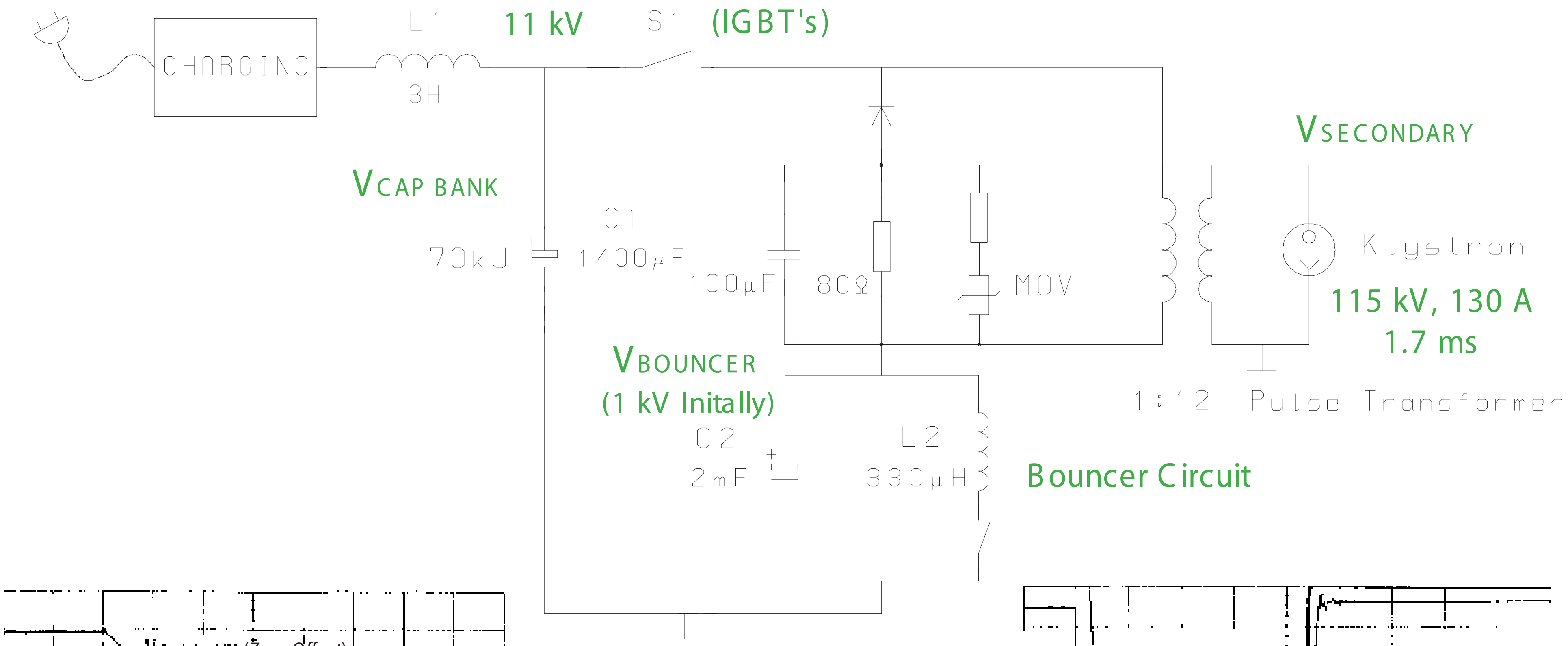

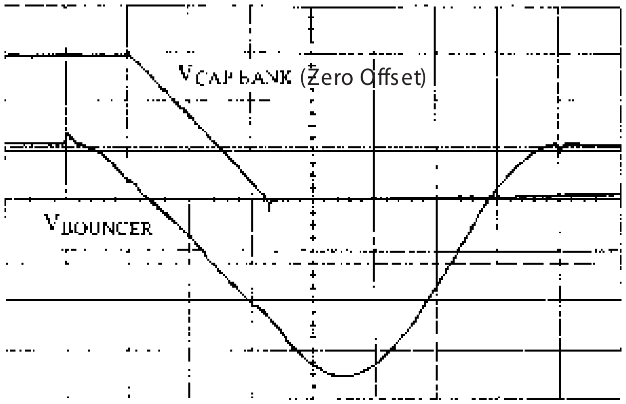

500 V/div

1 ms/div

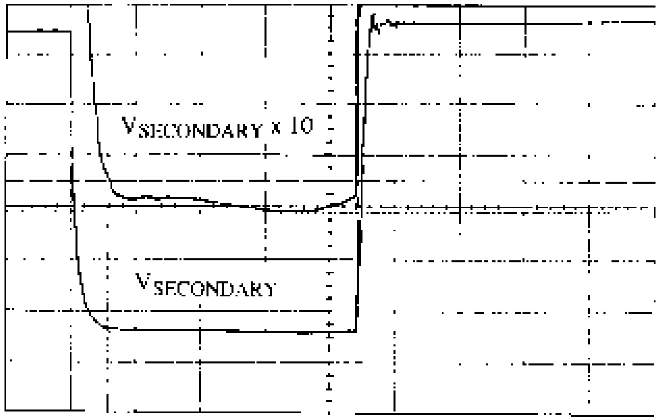

2 kV/div (top)
20 kV/div (bottom)

0.5 ms/div

Program to Improve High Gradient Structure Performance

(70 MV/m Unloaded Gradient Goal for 0.5 & 1 TeV Collider)

- Compare performance versus different:
  - Initial structure group velocity (5 % and 3% c) and length (20, 53 and 105 cm).
  - Cell machining and cleaning methods.
  - Structure type: standing-wave -vs- traveling-wave.
  - ⇘ Have processed 12 structures (5000 hours at 60 Hz).
- Systematic study of rf breakdown:
  - Measure breakdown related RF, light, sound, X-rays, currents and gas in structures, WG's and cavities.
  - Measure surface roughness/cleanliness/damage with SEM, EDX, XPS and AES.
- Improve structure handling and cleaning methods.

53 cm Traveling-Wave Structure
(3.3% c to 1.6% c Group Velocity)

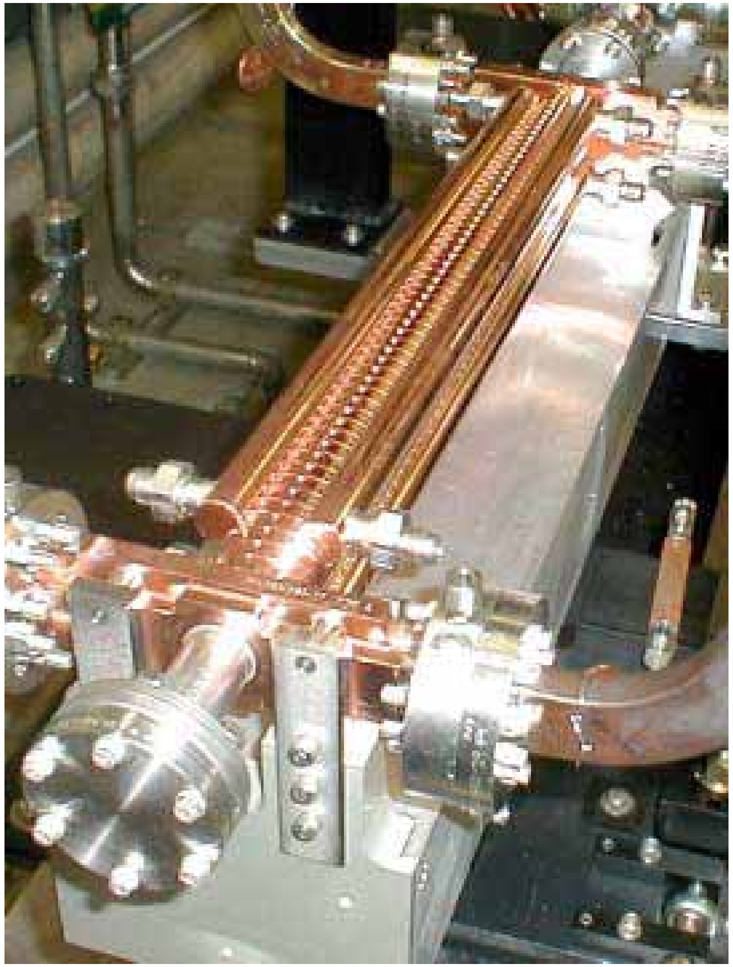

Example of Low Group Velocity Structure Performance at 70 MV/m

(120 Hours of Operation at 60 Hz with 400 ns Pulse Widths)

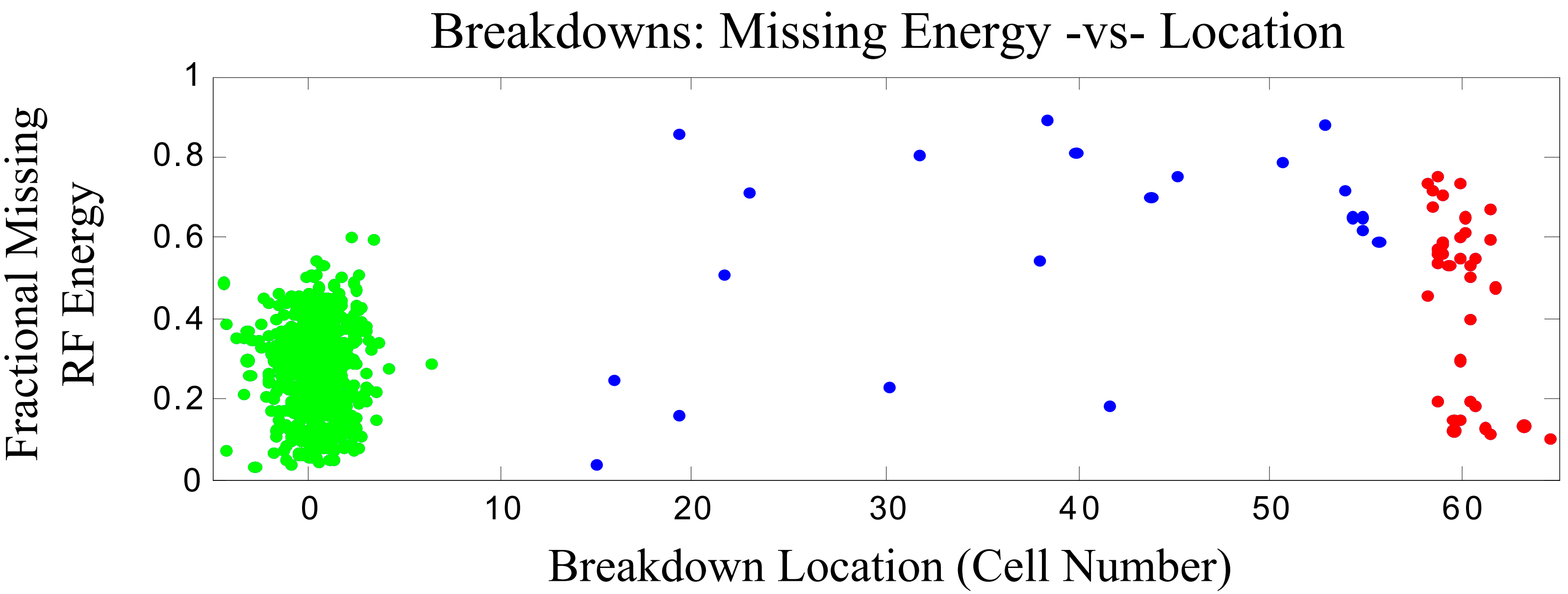

- Breakdown rate in structure body (blue events) = 0.2 per hour or about one in a million pulses.
  - NLC goal is < 0.1 per hour: measure from < 0.1 to 0.3 per hour in five structures.
- Breakdown rate in the two coupler cells (green and red events) = 5.5 per hour
  - Rates in other structure couplers vary from 0.1 to 5 per hour → suspect pulse heating at the coupler waveguide openings as the root cause.

SEM Photos of Structure Input Coupler Iris and Input Waveguide Openings

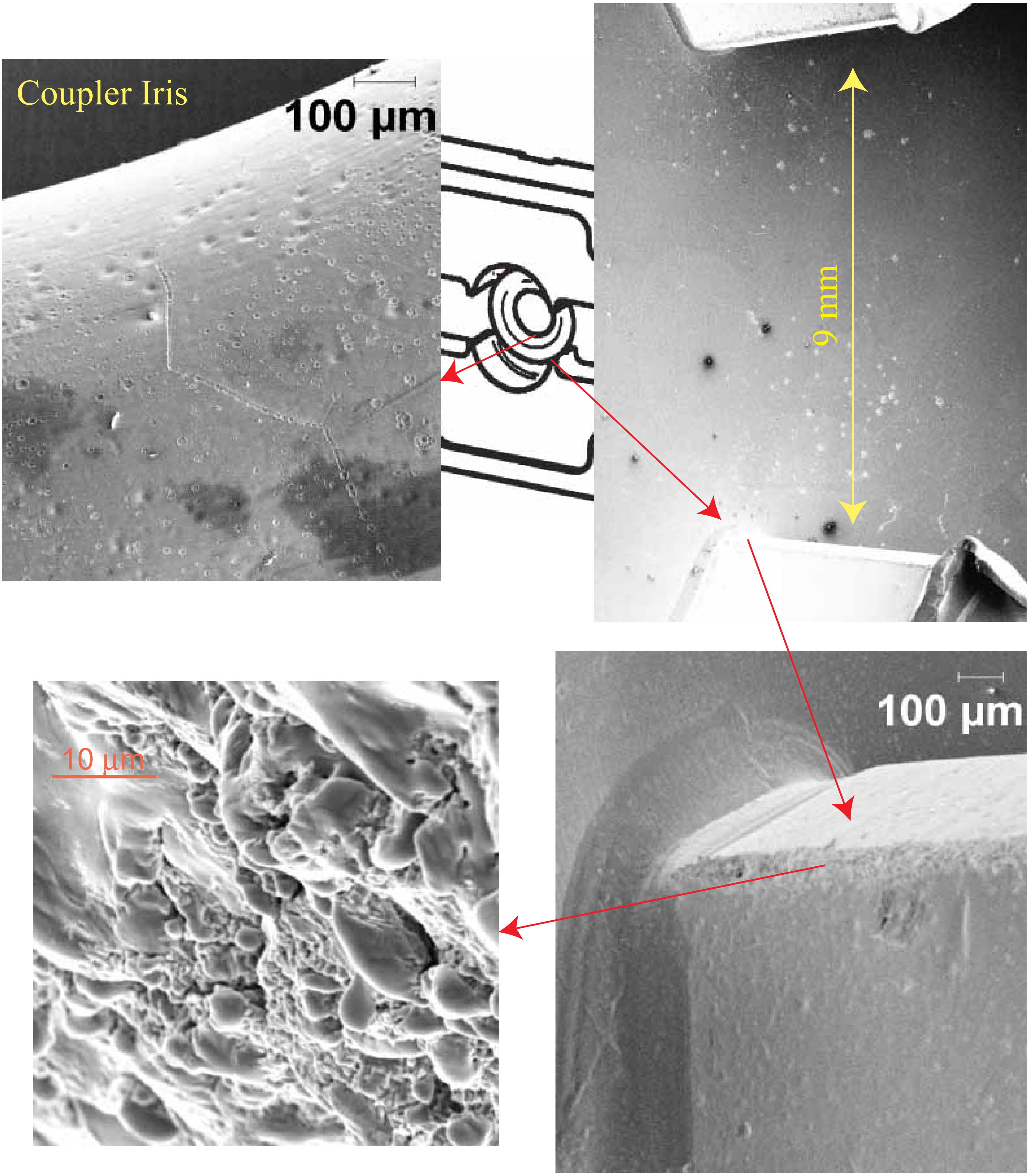

Traveling-Wave Structure Program

- Test couplers with lower pulse heating and surface fields.
  - Several possible designs: rounded edge, mode converter, inline taper and choke joint.
- Beginning tests of 150 degree per cell structures that have NLC-acceptable iris radii and low group velocity.
  - Dipole modes are detuned.
- Designing ‘NLC-ready’ structure with manifold wakefield damping - to be tested in early 2003.

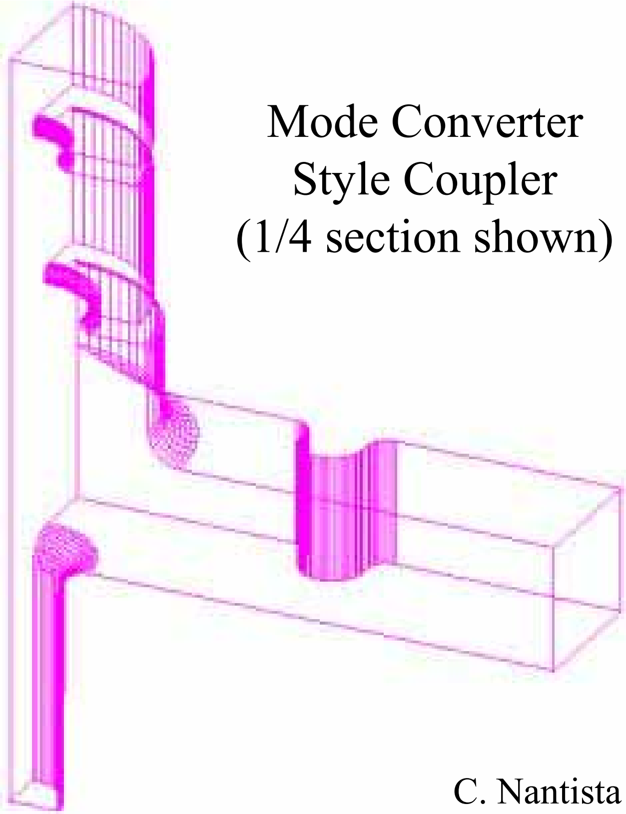

Mode Converter
Style Coupler
(1/4 section shown)

C. Nantista

Standing-Wave Structures

- In NLC, standing-wave structures would operate at the loaded gradient of 55 MV/m.
- In recent tests, measured breakdown rates of < 1 per 8 million pulses at this gradient and no discernable frequency change after 600 hours of operation.
- Pulse heating in coupler likely limiting higher gradient operation – will be reduced in future structures.
- Working to incorporate wakefield damping to make them a viable NLC candidate.

15 Cell, 20 cm Standing-Wave Structure

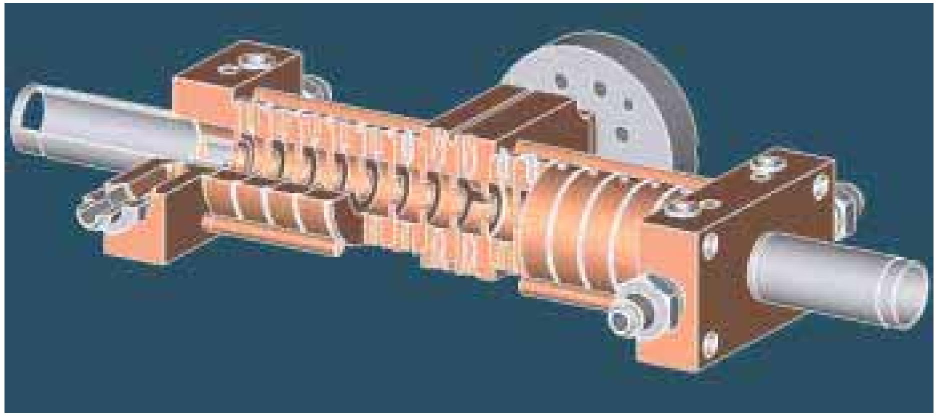

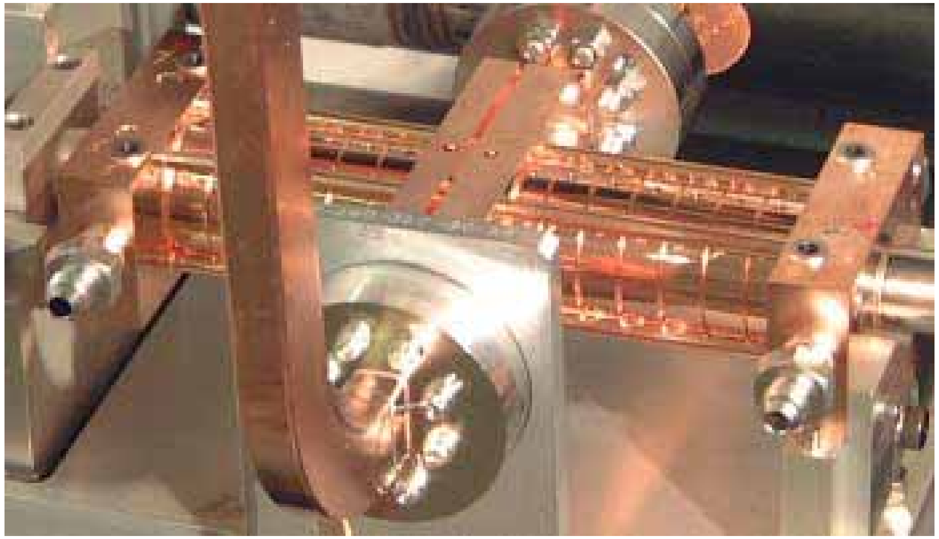

Cavity Development

- Goals during past decade: increase cavity gradients from 5 to 25 MV/m and reduce cavity costs by a comparable factor.
- Built on experience from industrial fabrication of cavities for CEBAF.
- Improved material QC and introduced new cavity preparation procedures, including 1400 °C annealing with a titanium getter, ultra-pure, high pressure water rinsing and high-power processing.
- Have achieved gradient goal and now working to increase operating level to 35 MV/m to allow a future TESLA upgrade to 800 GeV cms.

Field Emission in a Superconducting RF Cavity

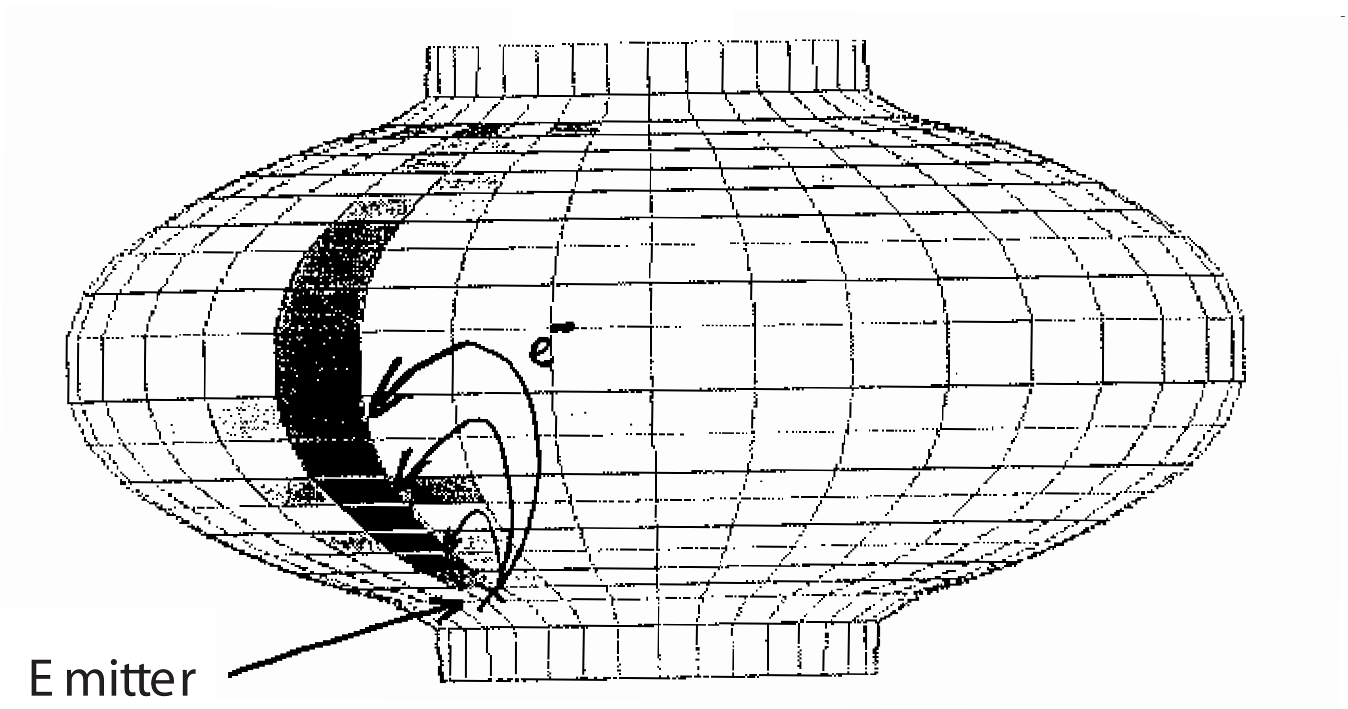

Map of Temperature Increase Caused by Field Emission

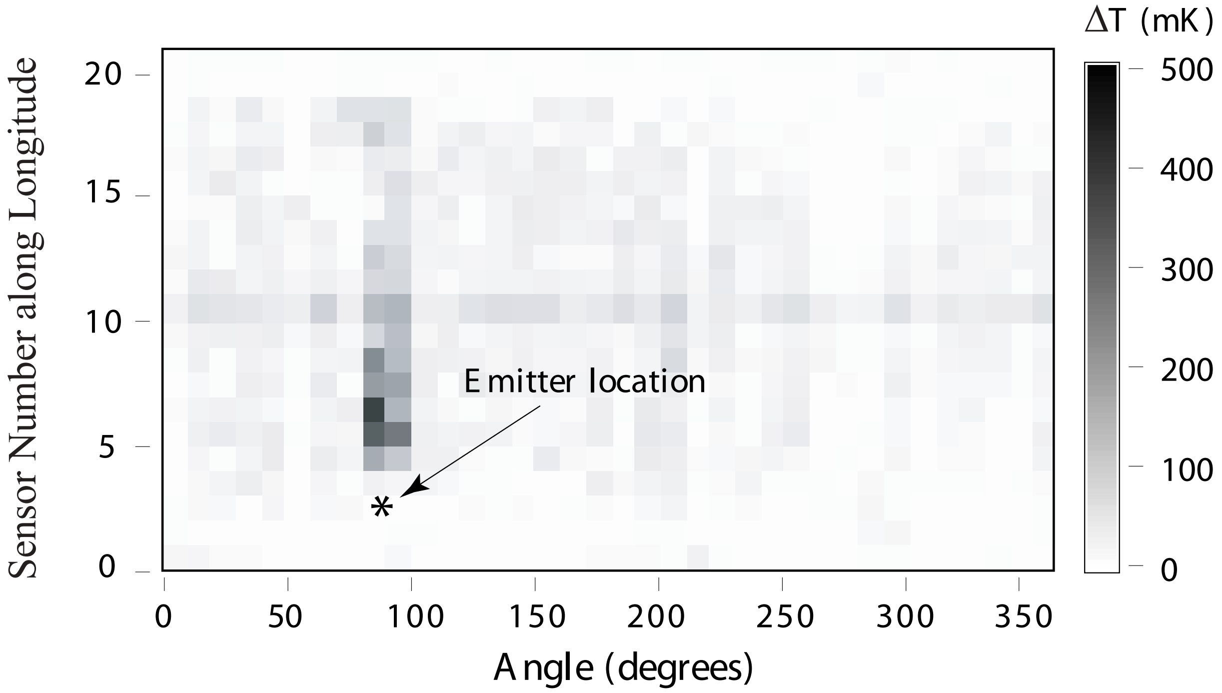

J. Knobloch

High Gradient Performance

Excitation Curves Measured in the Vertical Cryostat for Cavities from the Third Production Series

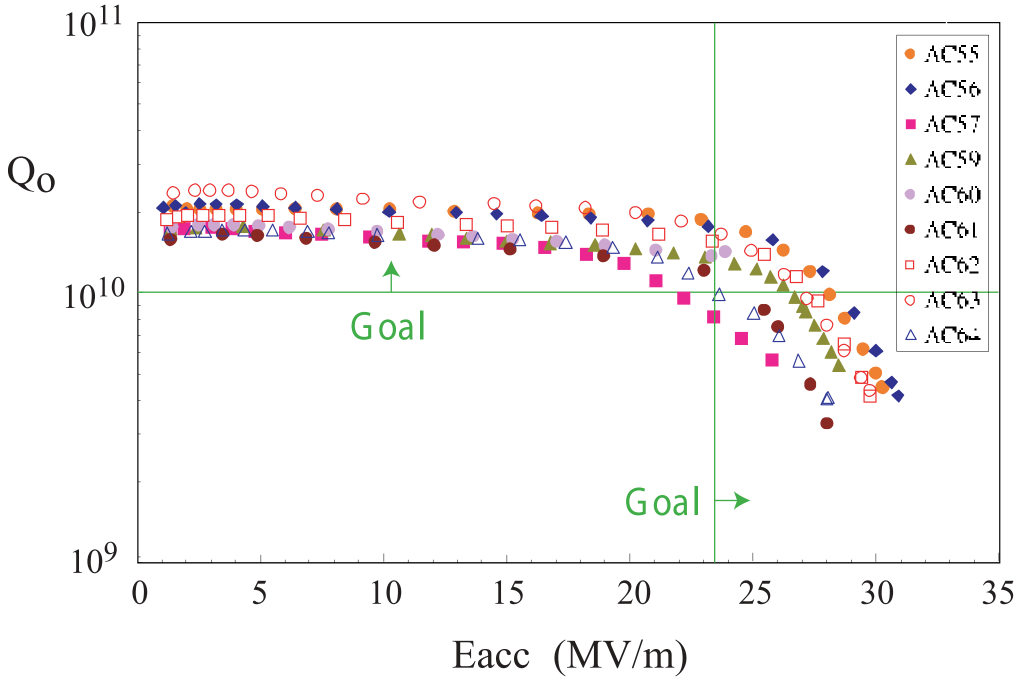

Average Cavity Gradients at $Q_o \geq 10^{10}$ Measured in the Vertical Cryostat for (a) the First Three Production Series and (b) Cavities Installed in the First Five Eight-Cavity Cryomodules

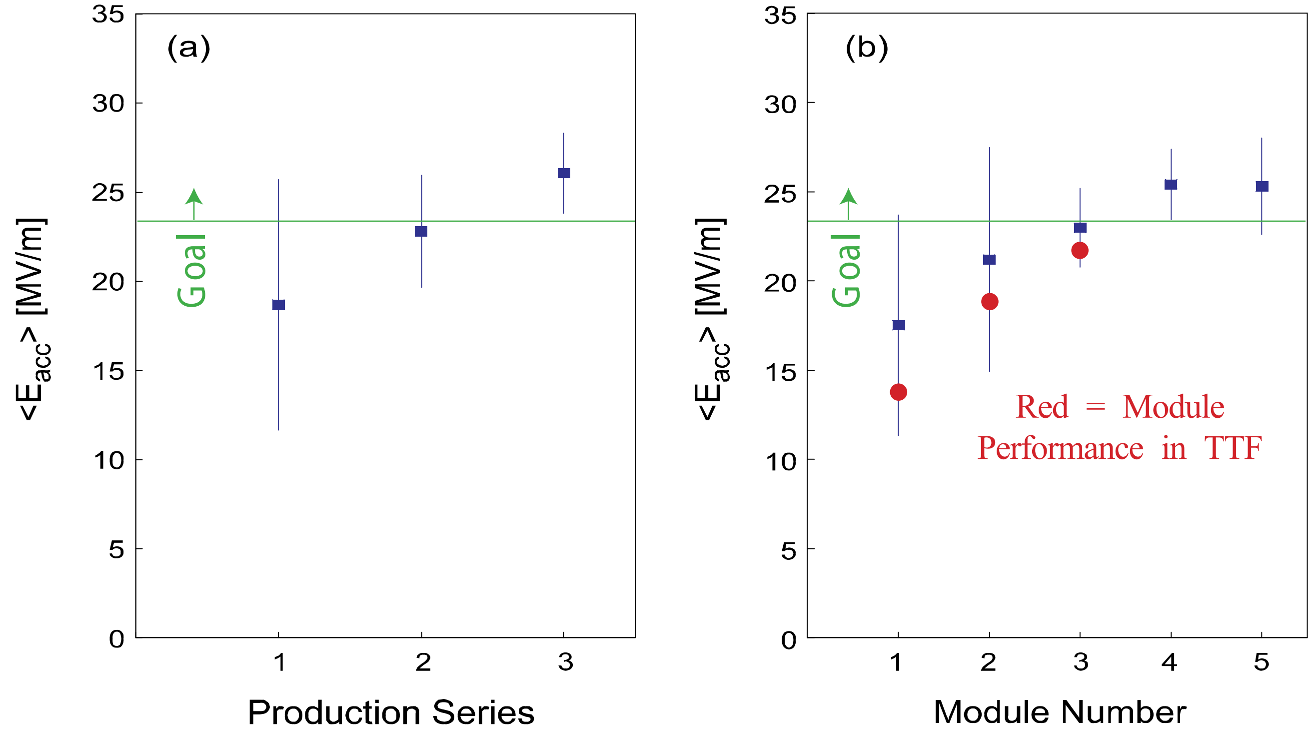

High Gradient Studies

Results Using Electro-Polishing (EP) Technique Developed at KEK in which Material is Removed in an H_2SO_4, HF Mixture Under Current Flow

-vs-

Buffered Chemical Polishing (BCP)

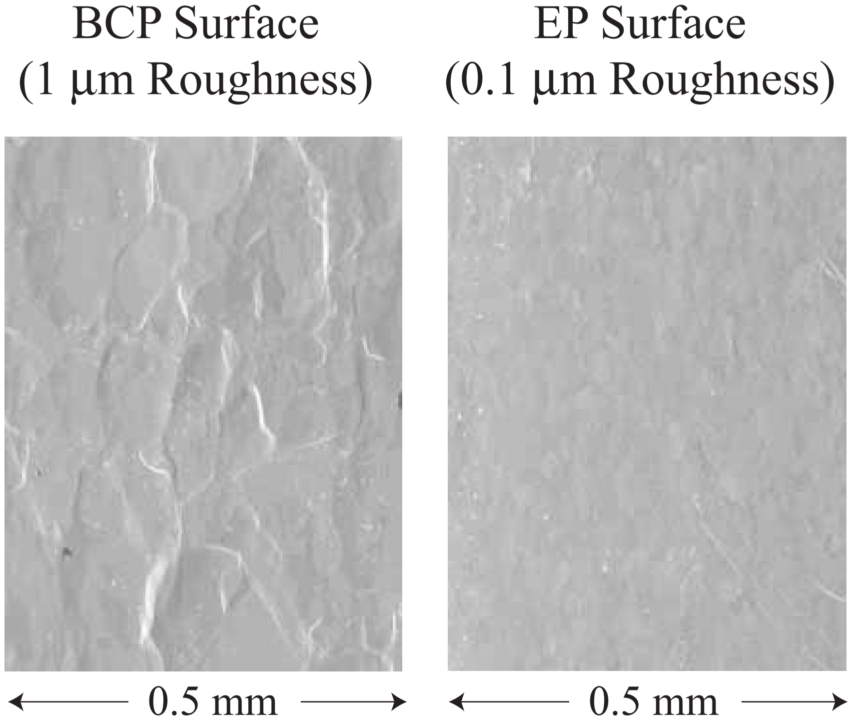

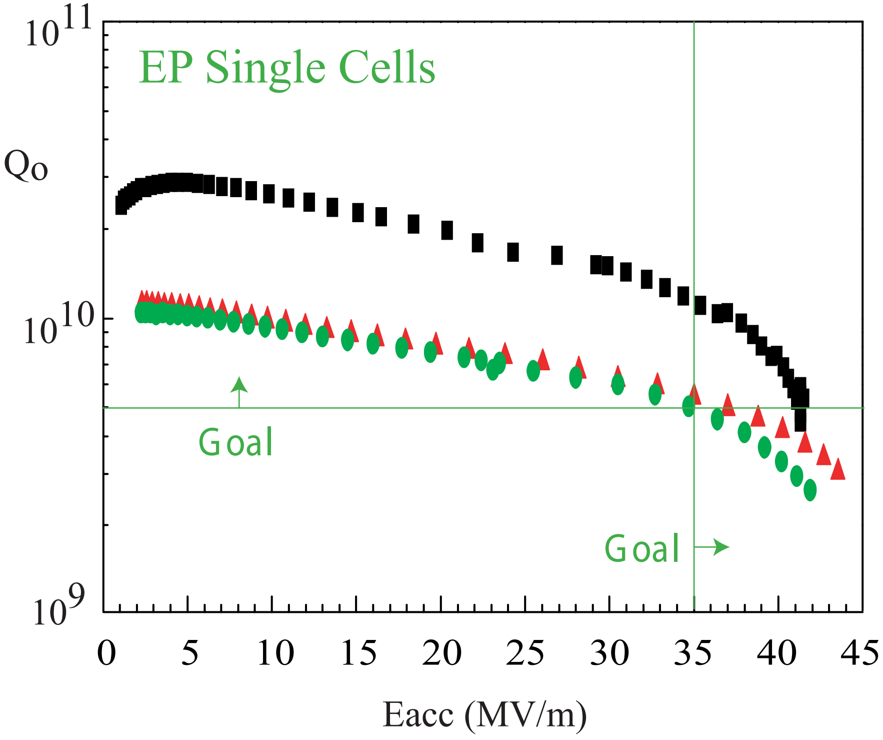

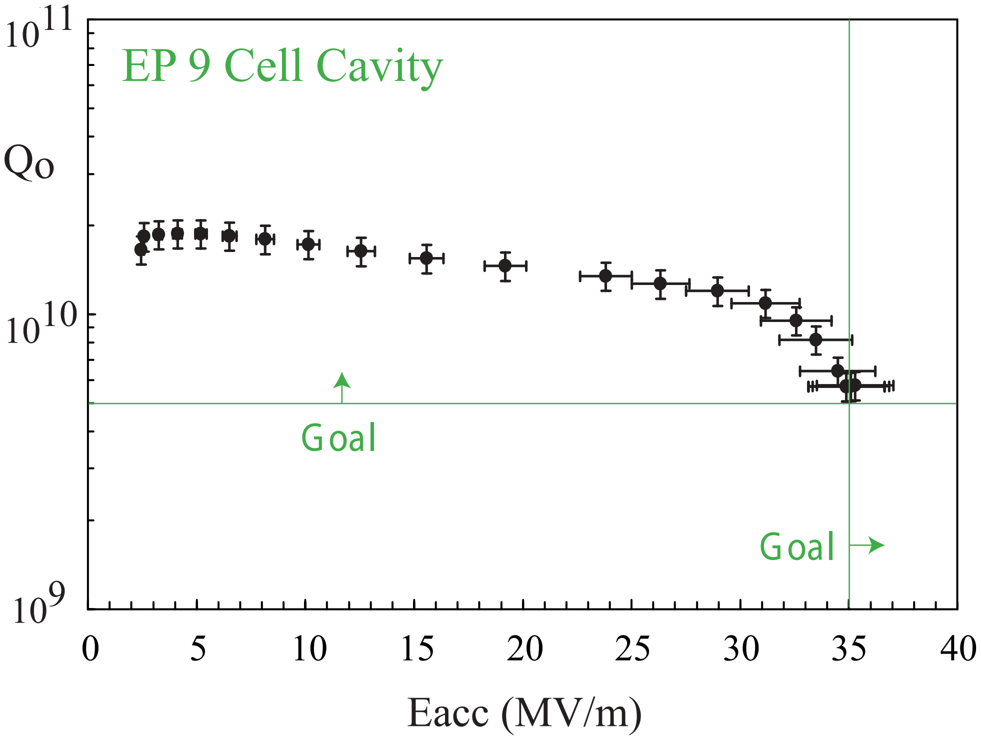

CLIC Structure Development

High gradient studies:

- Recently achieved 150 MV/m peak unloaded gradient in a low group velocity structure with tungsten irises.
- Testing limited by power source pulse length: 15 ns available, 130 ns required.

Developing wakefield damping and detuning methods at 30 GHz.

- TDS design (see below) successfully tested at ASSET.

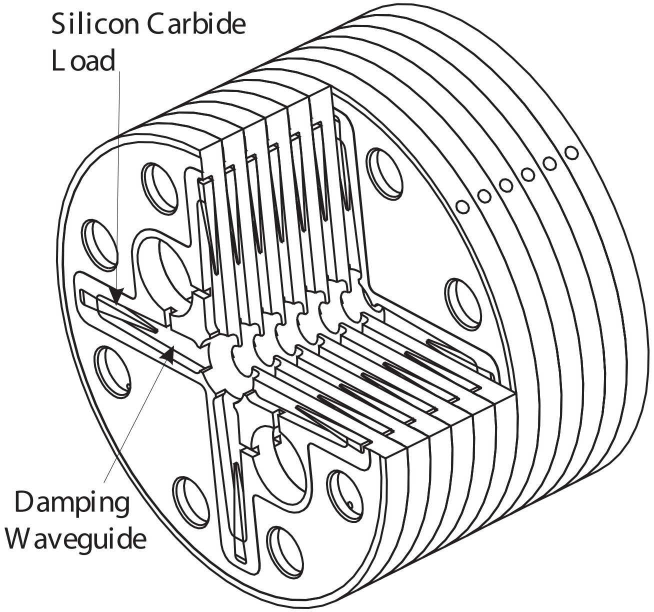

Cross-sectional View of the Tapered-Damped Structure (TDS) Geometry.

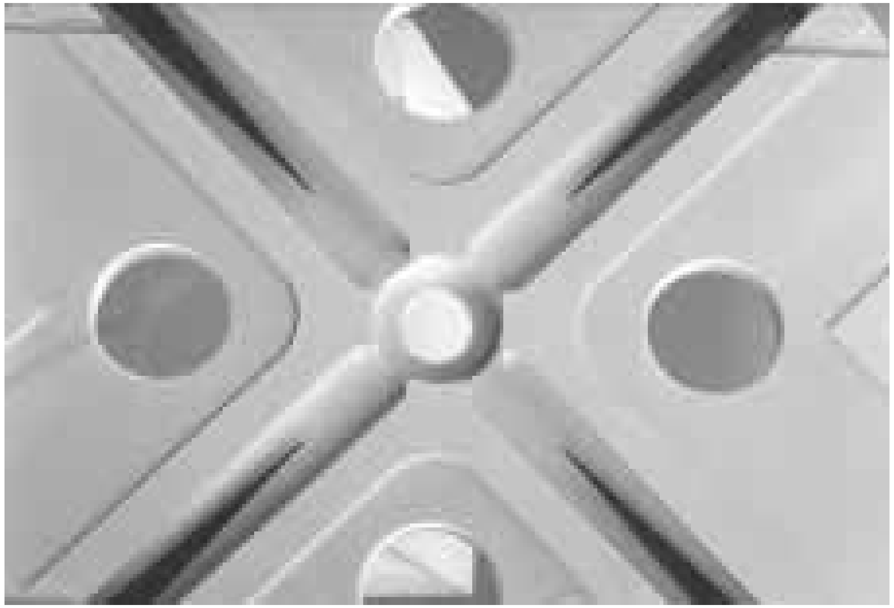

Photograph of a TDS Cell with Damping Waveguides and SiC loads.

Next Linear Collider Test Accelerator (NLCTA)

- Construction Started in 1993 Using First Generation RF Component Designs.
- Goals: RF System Integration Test of a Section of NLC Linac and the Efficient, Stable and Uniform Acceleration of a NLC-like Bunch Train.
- In 1997, Demonstrated 15% Beam Loading Compensation of a 120 ns Bunch Train to < 0.3%.


NLCTA Linac

NLCTA Linac RF Unit (One of Two)

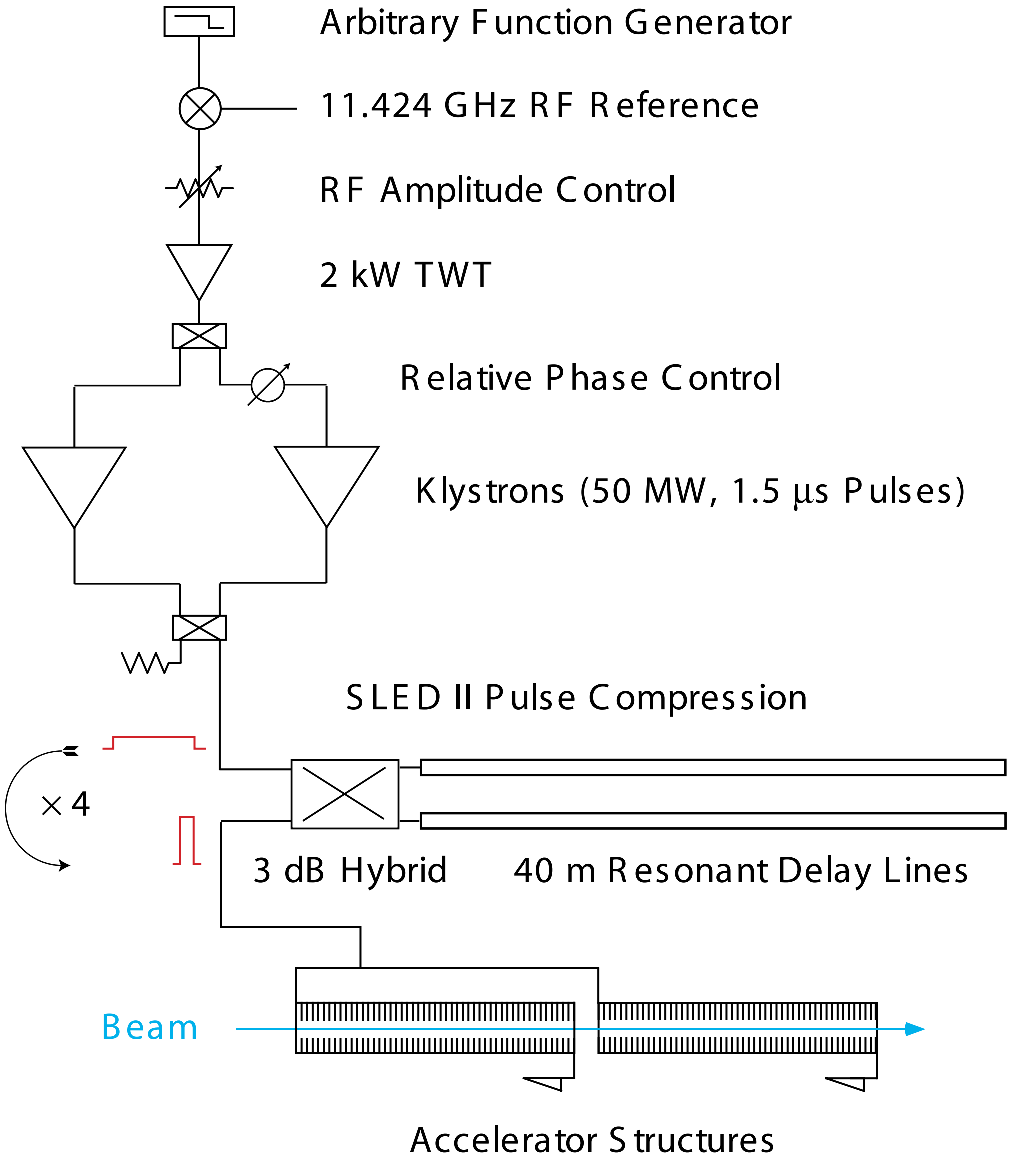
Arbitrary Function Generator

11.424 GHz RF Reference

RF Amplitude Control

2 kW TWT

Relative Phase Control

Klystrons (50 MW, 1.5 μs Pulses)

SLED II Pulse Compression

× 4

3 dB Hybrid

40 m Resonant Delay Lines

Beam

Accelerator Structures

Eight-Pack Test Phase I: Multi-Moded SLED II

(Begin Testing in Early 2003)

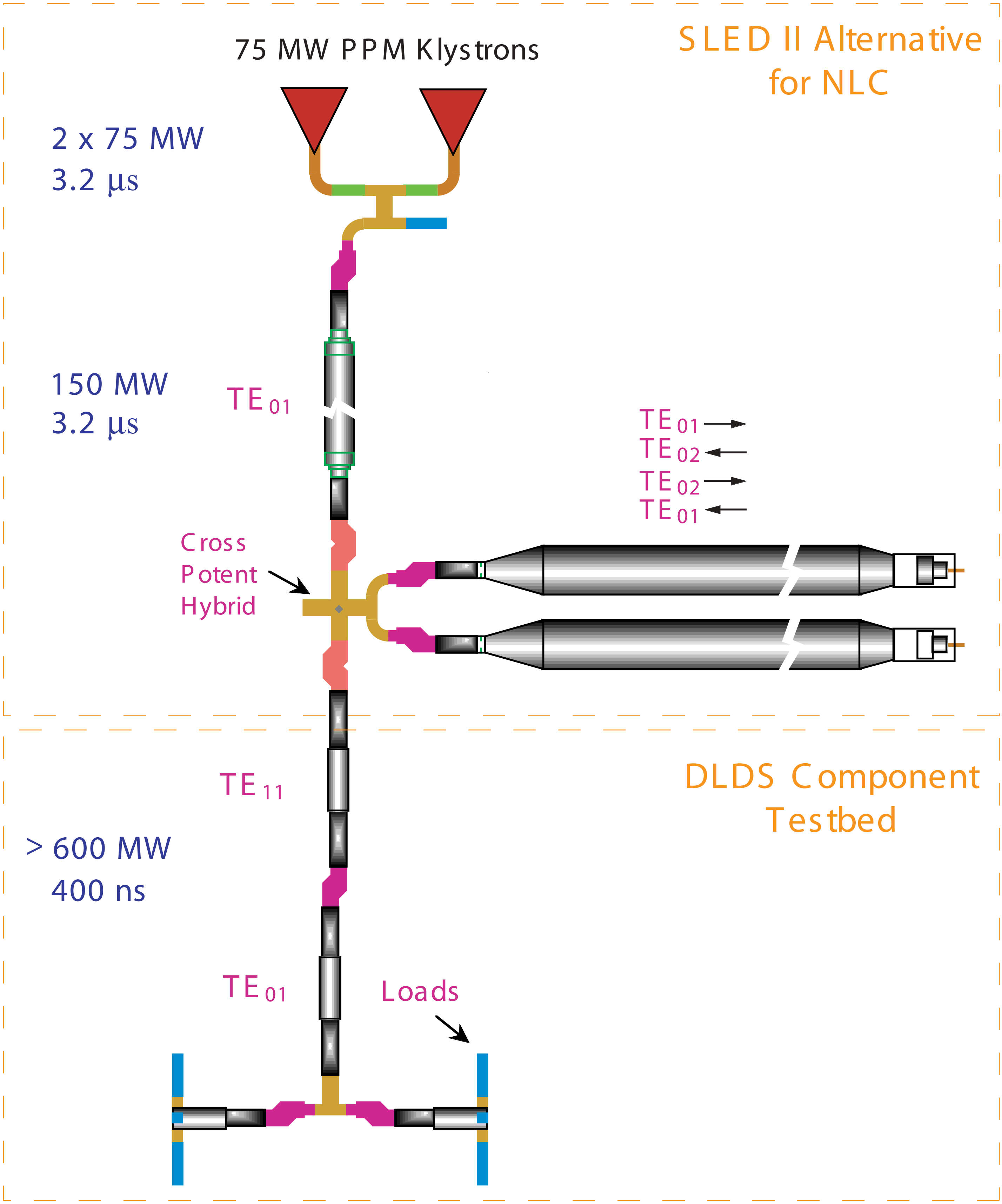

75 MW PPM Klystrons

SLED II Alternative
for NLC

2 x 75 MW
3.2 µs

150 MW
3.2 µs

TE_{01}

TE_{01} →
TE_{02} ←
TE_{02} →
TE_{01} ←

Cross
Potent
Hybrid

TE_{11}

DLDS Component
Testbed

> 600 MW
400 ns

TE_{01}

Loads

Eight-Pack Test Phase II: Full Power, Integrated Test of Essential NLC RF System Components

(Full-Scale Testing Begins in Mid-2004)

Setup Includes:

Low Level RF System

490 kV, 3-Turn Induction Modulator

Eight 2 KW TWT Klystron Drivers (not shown)

Eight 75 MW PPM Klystrons

Reduced Delay Line Distribution System (2 Mode)

Two Accelerator Structure Sextets (11 m Total)

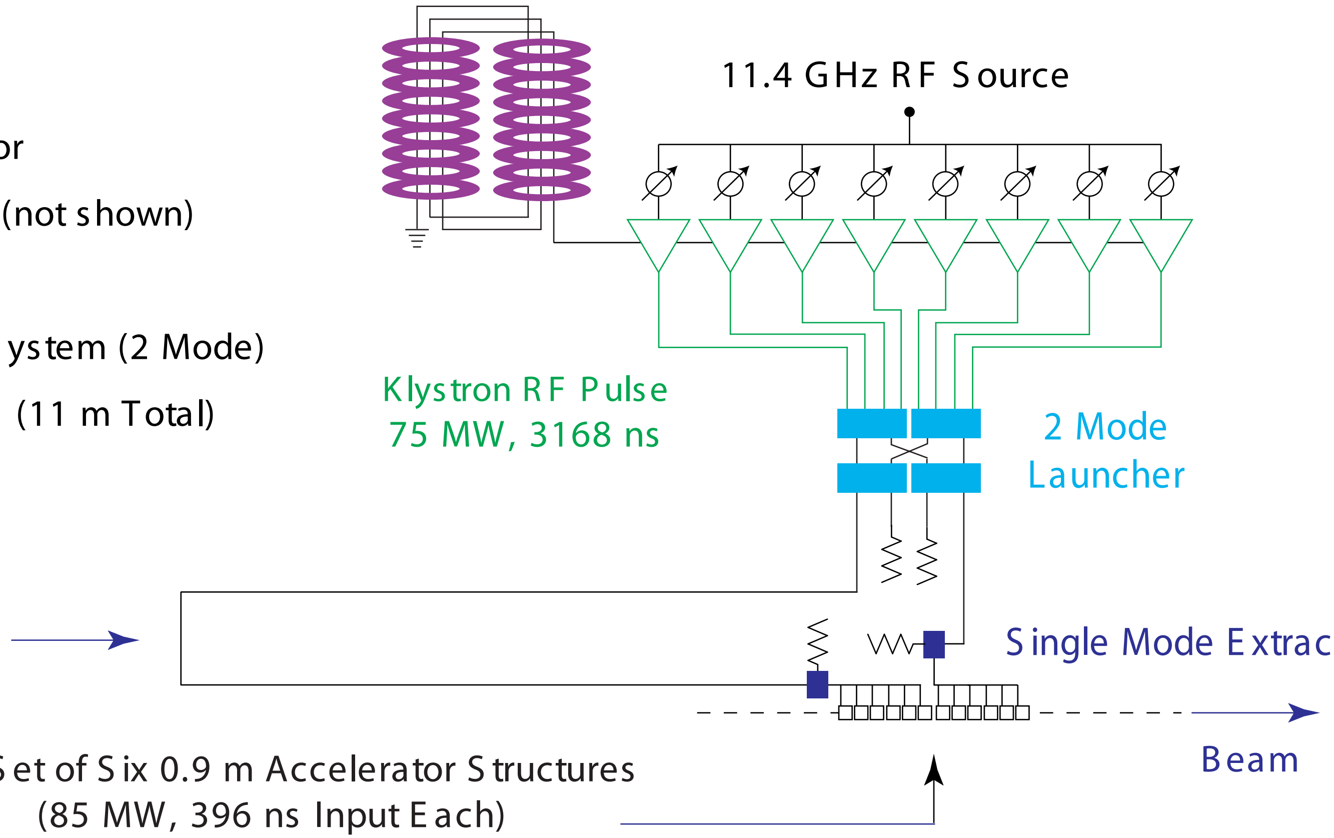

Induction Modulator

11.4 GHz RF Source

Klystron RF Pulse
75 MW, 3168 ns

2 Mode
Launcher

117m of Circular Waveguide

Single Mode Extractor

Beam

Two Set of Six 0.9 m Accelerator Structures
(85 MW, 396 ns Input Each)

The TESLA Test Facility (TTF)

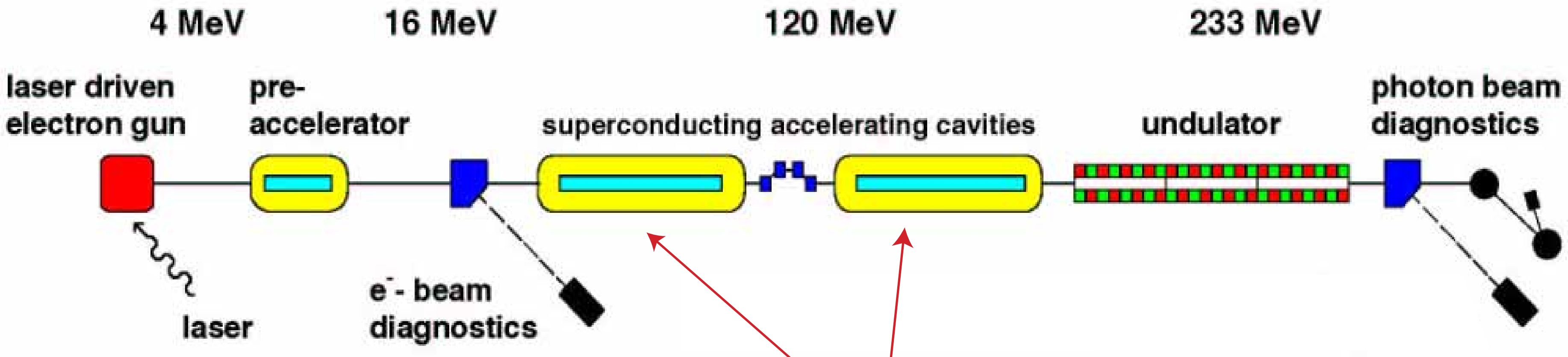

4 MeV

16 MeV

120 MeV

233 MeV

laser driven electron gun

pre-accelerator

superconducting accelerating cavities

undulator

photon beam diagnostics

laser

e⁻- beam diagnostics

Eight Cavity Cryomodules

TTF Linac

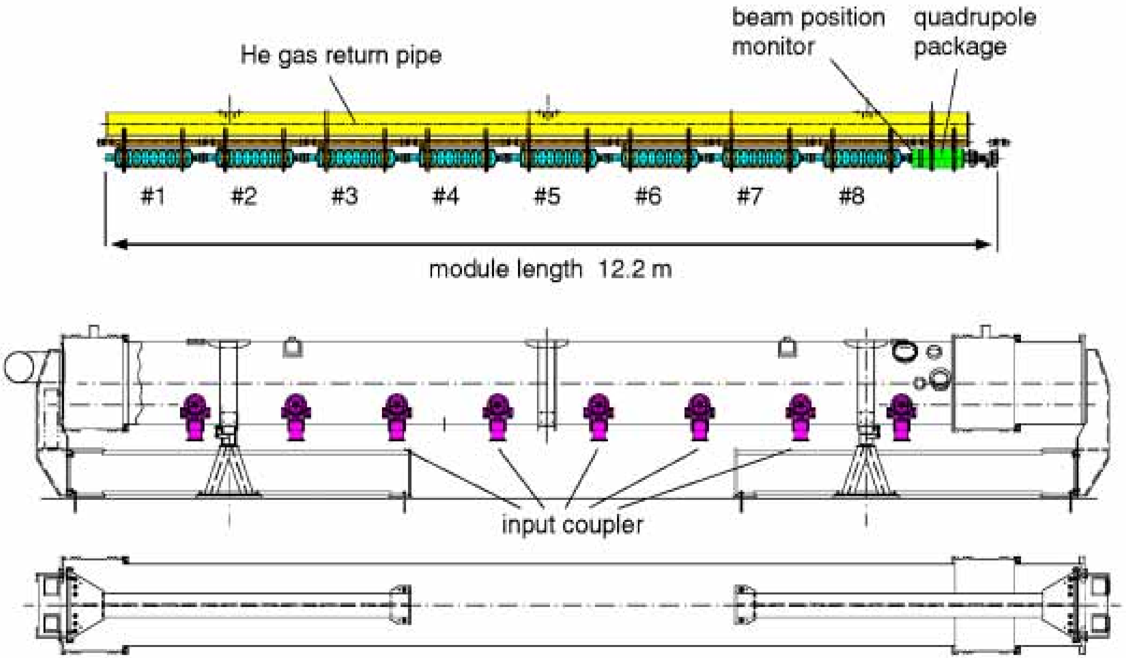

TESLA Test Facility Phase II:
FEL User Facility in the nm Wavelength Range

- 1 GeV Beam Energy Achieved Using 6 Cryomodules with 8 Cavities Each, About 50 m of Accelerator.
- One Cryomodule Will Contain 8 Electro-Polished Cavities.
- Provides Testbed for Klystrons and Modulators Developed with Industry.
- High Gradient Test Program to Start in Summer of 2003.

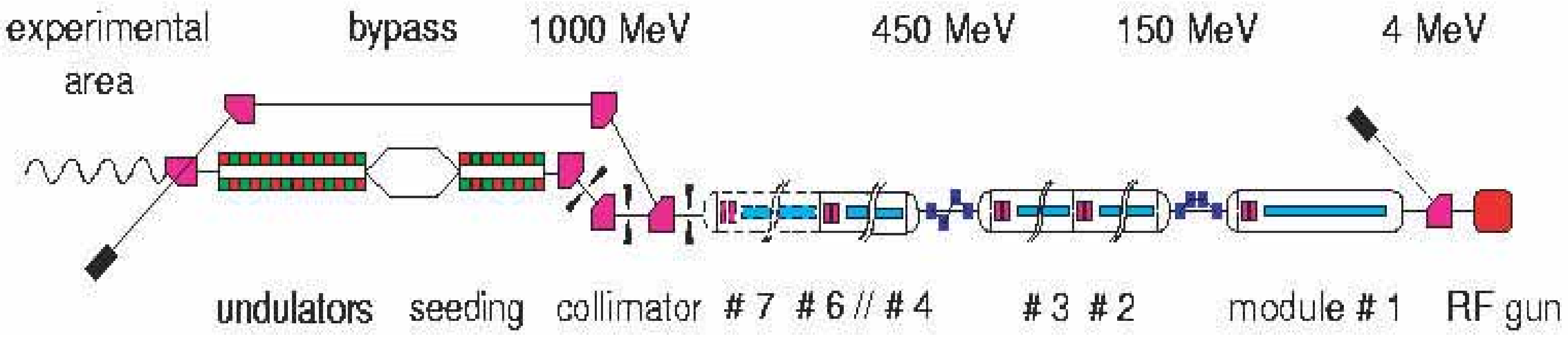

Energy Upgrades

- NLC: 1 TeV CMS
  - Fill second half of each tunnel with RF components (linac tunnel length remains the same).
  - Run with same linac beam parameters as 500 GeV operation. Linac AC power doubles.
- TESLA: 800 GeV CMS
  - Run at 35 MV/m with 50% higher beam power (linac tunnel length remains the same).
  - Requires doubling 2 K cooling capacity and number of klystrons and modulators. Linac AC power increases by 50%.
- CLIC
  - Lengthen linac and drive beam.
  - Drive accelerator requires proportionally higher modulator capacity, cooling and AC power.

Summary

- Both TESLA and NLC/JLC have major rf system tests planned in the next 2-3 years to validate collider operation to 800-1000 GeV cms energies.
  - TESLA TTF2 including a cryomodule operating at 35 MV/m.
  - X-Band 8-Pack rf source powering structures to 70 MV/m.
- CLIC is building the CTF3 two-beam facility (operation in 2006), which will provide a longer pulse power source for high gradient testing.
- Detailed comparison of linear collider designs will be published this October (TRC Report).