I. USE OF THE HODOSCOPE TO MEASURE THE AXIAL FREQUENCY OF BETATRON OSCILLATIONS; II. THE ACCELERATING SYSTEM OF THE GRENOBLE ISOCHRONOUS CYCLOTRON

H. Leboutet, J. Aucouturier, J.C. Schnuriger
Compagnie Générale de Télégraphie sans Fil, Orsay.
(Presented by H. Leboutet)

For the 60 MeV proton cyclotron now in construction at CSF for Grenoble University, see Fig. 1, a special emphasis is put on versatility. It will be possible to accelerate heavy ions as well as protons and also to provide for continuous variation of energy during operation around a central energy, see Fig. 2. This implies special attention to: 1) magnetic field setting and control, 2) special design of the RF system, and 3) special design of the extraction system.

The first item requires the control of the power supplies from a central computer, acting on cams, which will reproduce the experimental settings of the magnet currents.

To provide this control system, it is necessary to get a great amount of experimental data on stability conditions for every possible working situation. Application of the "floating-wire technique" seemed a good way of getting a rough, but quick, general understanding of the main parameters. But it turned out that, with special care in the experimental setup, this technique could do much more. It provides fairly good accuracy in determining the conditions for isochronism and measuring the betatron frequencies, at least in the range of energy for which this machine is designed.

The second requirement leads to a particular concept of the RF power supply and the resonant cavity, which will be described later. The third item will not be considered here.

I - A METHOD OF QUICK DETERMINATION OF MAGNETIC FIELD PARAMETERS.

The equilibrium equation for a conducting wire in a magnetic field B is

$$\frac{d}{ds}(T\vec{E}) + i\vec{E}\wedge\vec{B} + \vec{mg} = 0.$$

The weight mg of the wire modifies the vertical projection of the trajectory but the resulting variation in the tension of the wire is negligible (less than 10^{-3}). Then the corresponding particle regidity $B\rho$ versus the ratio T/i is not affected by the weight of the wire. If one is using several wires, set a few centimeters apart, it can be shown that the mutual attraction or repulsion is negligible in the experimental conditions.

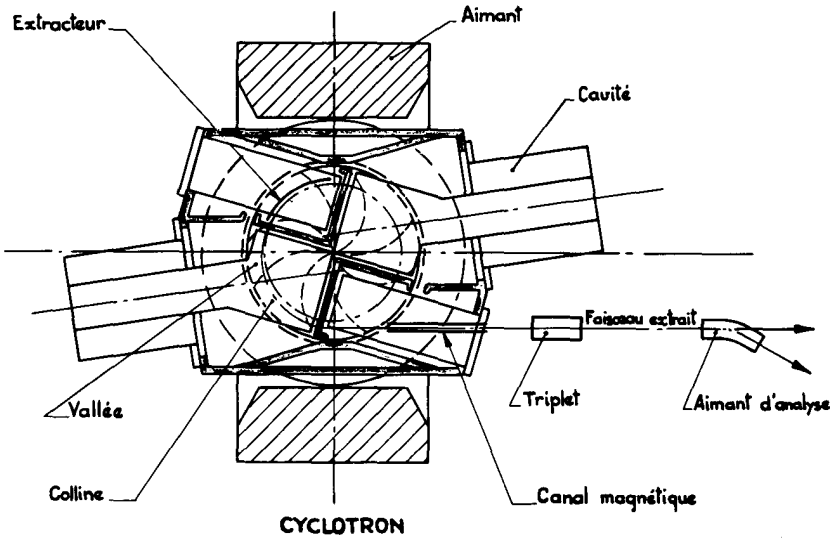

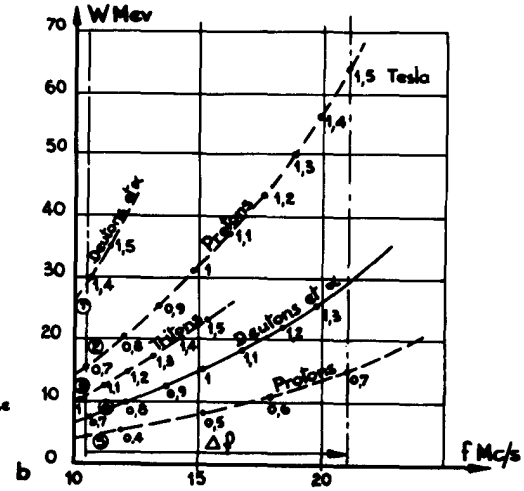

Fig. 2 Ion energies in the Grenoble Cyclotron.

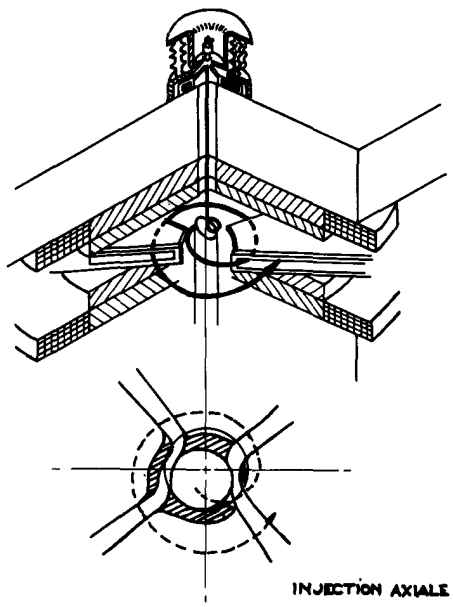

Fig. 1 Plan of Grenoble Cyclotron and ion source.

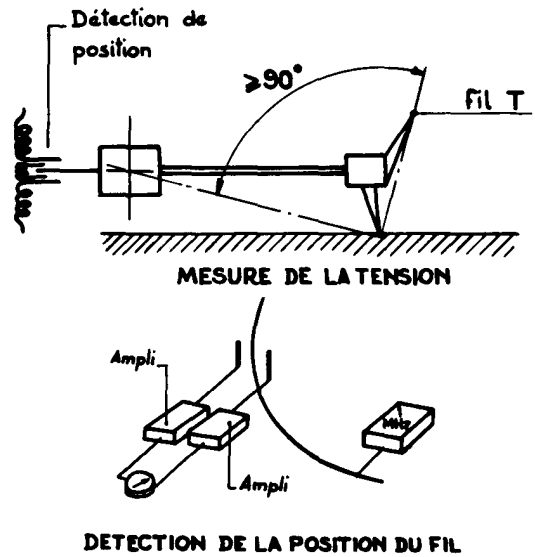

Fig. 3 Experimental arrangement for measuring tension and position of wire.

The basic experimental setup, as illustrated in Fig. 3, includes: 1) a support for holding three radial arms on which the wires can be fixed, 2) detectors for position of the wires, and 3) tension-measuring devices.

The position of the wire is determined either by observation through a telescope, or by electromagnetic detection. A 1 Mc/s signal is put on the wire which passes between two small antennas 2 mm apart; these are connected to transistor preamplifiers. A comparison of the amplitudes of the two signals can give the position of the wire with an accuracy of the order of 1/100 mm.

The tension of the wire is determined by a special balance which indicates when the tension equilibrates the weight of a fixed mass. The parameter is the current

intensity through the wire. The balance is mounted on corindum needles; the accuracy easily obtained is 10^{-3}. The practical limit is 10^{-4}. This balance method is preferred over the pulley method which gives a lower accuracy and is more difficult to handle.

Principle of the Method

Assuming identical sectors, the method consists in the determination of the transfer matrix through one sector. The trace of the matrix can be determined by measurement of the position of the trajectory in three conjugate planes.

The measurements were actually made on a 4 sector model. The symmetry of 4 sectors makes the geometrical plotting easier, but the same method can be applied to any number of sectors.

Let $\begin{pmatrix} a, b \\ c, d \end{pmatrix}$ be the transfer matrix from one sector to the next, the reference planes being chosen at the center of a hill or of a valley, y_0, y_0', y_1, y_1', y_2, y_2', the positions and angles of the trajectory at three adjacent planes, at a distance $2\pi/N$.

One has the relations:

$$\begin{pmatrix} y_1 \\ y_1' \end{pmatrix} = \begin{pmatrix} a, b \\ c, d \end{pmatrix} \begin{pmatrix} y_0 \\ y_0' \end{pmatrix} \qquad \begin{pmatrix} y_2 \\ y_2' \end{pmatrix} = \begin{pmatrix} a, b \\ c, d \end{pmatrix} \begin{pmatrix} y_1 \\ y_1' \end{pmatrix}$$

From which one gets

$$y_2 + (ad - bc)y_0 = (a + d)y_1 ,$$

where y represents the amplitude of a betatron oscillation. Let μ be the phase shift of this oscillation through one sector

$$(a + d) = 2 \cos\mu = 2 \cos\nu\frac{2\pi}{N} .$$

And since for all the structures which can be used ad - bc = 1 (the effect of energy variation is not considered) one gets

$$y_2 + y_0 = 2y_1\cos\nu\frac{2\pi}{N} \qquad (1)$$

Then the phase shift, and the wave number, can be computed from position measurements in three planes, without any angle measurement.

Closed Orbit

If the field is perfect, the closed orbits have a $\frac{2\pi}{N}$ symmetry. They cross the three reference planes at equal distance from the center. Inversely, if a trajectory crosses the three planes at points which are equal distance from the center, it is part of a closed orbit. If the field is not perfect, the closed orbit can be off-centered, and one gets only one particular orbit experiencing a certain amplitude of

of radial oscillation. This is equivalent to finding the exact closed orbit radius R, corresponding to the trajectory passing through the reference planes at distances r_1 r_2 r_3.

From Eq. (1) we have

$$(r_1-R) + (r_3-R) = 2 \cos\mu_r \, (r_2-R) ,$$

but $\nu_r \sim 1 + \frac{k}{2} \simeq 1 + \frac{W}{U}$, W = kinetic energy, U = rest energy

then, for N = 4

$$(r_1-R) + (r_3-R) = -2\pi\frac{W}{U} (r_2-R)$$

$$R = \frac{r_1+r_3}{2} \left[1 + \frac{\pi W}{2U} \frac{2r_2 - (r_1+r_3)}{r_1+r_3} - \frac{\pi^2 W^2}{\gamma U^2} \frac{4r_2 - (r_1+r_3)}{r_1+r_3} \right].$$

Then the measure of $r_1 + r_3$ gives a good approximation to the radius of the closed orbit, even if the exact location of the center is not known.

The Average Field

The length of the closed orbit can be determined either by $L = \pi(r_1 + r_3)$, or by the length of the wire passing through $r_2 = (r_1 + r_3)/2$. The tension of the wire is related to the energy of the corresponding particle by $T/i = mV/e$. From the momentum and length of orbit, the average field can be found through the relation

$$\frac{T}{i} = \frac{B_o}{2\pi} \frac{L}{\sqrt{1 - \frac{L^2}{\lambda_o^2}}} .$$

Setting the correcting coil currents for a given energy and particle can be made in a single experiment. A certain number of wires are installed on the board, each connected to a balance pretuned to the tension corresponding to its length. The correct law of average field is obtained when all the wires are in equilibrium, see Fig. 4.

Axial Betatron Frequency

Relation (1) is also true for the axial position; the distance y is the distance between the actual orbit and the central unperturbed orbit, which is not known. It comes from the properties of linear equations that the relation (1) is still true when y is the distance between any two orbits, located in the same vertical plane (having the same phase shift per sector).

The determination of ν can then be made by placing two wires of the same length

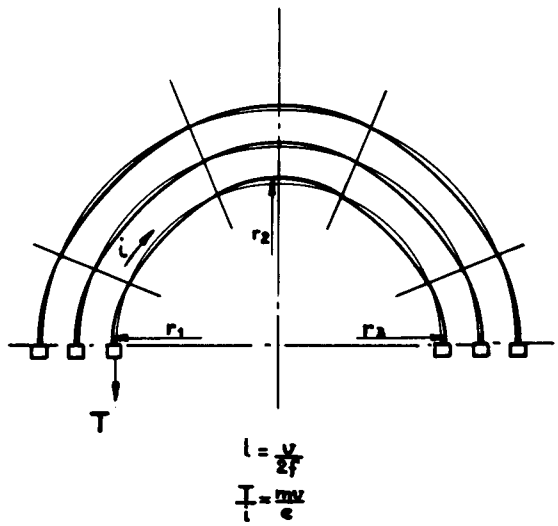

Fig. 4 Determination of average field.

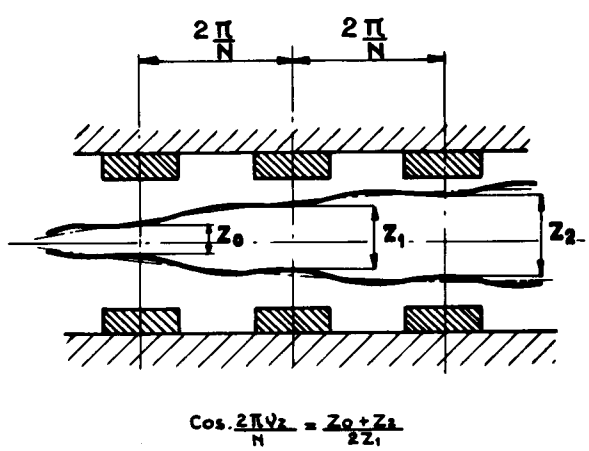

Fig. 5 Determination of ν_z.

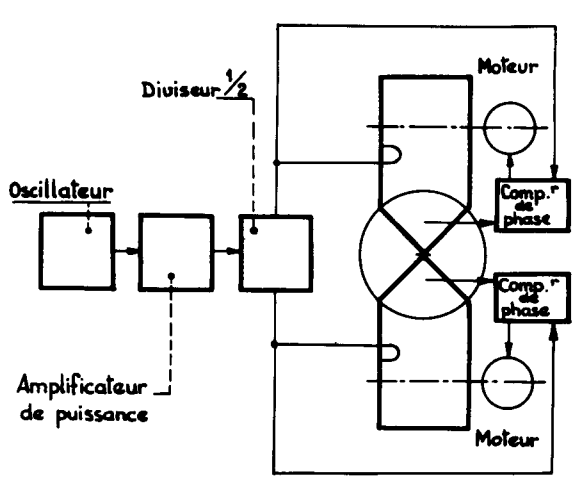

Fig. 8 Diagram of RF system.

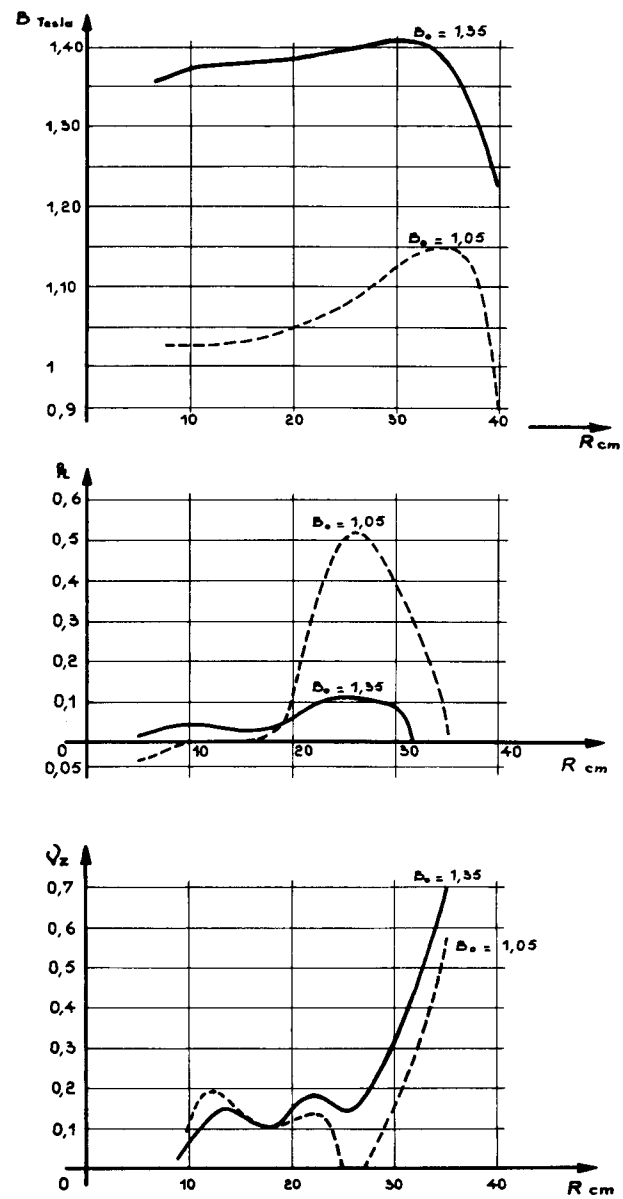

Fig. 7 Measured properties of the magnetic field.

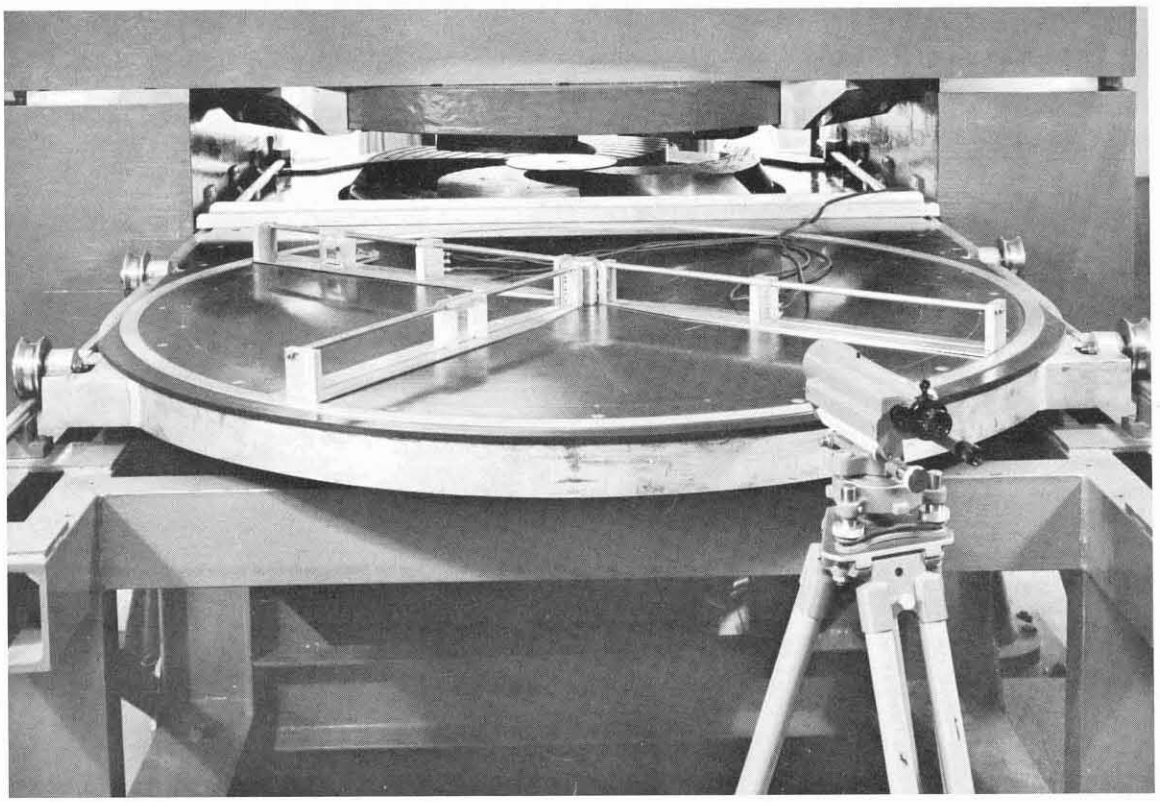

Fig. 6 The setup for the floating wire technique.

as shown in Fig. 5, and plotting accurately the distances between the wires where they cross the reference planes. By choosing the reference planes on the geometrical symmetry axis, the position of those planes need not be defined very accurately. The accuracy to which ν_z can be determined depends ultimately on the accuracy to which the distance between the wires can be measured. The best way is to use a telescope to look at the wires.

Let z be the average distance between the wires (3 cm in the actual measurements) and δz the incertitude in the value of z. One gets

$$\cos\mu_z = \cos\frac{\pi}{2}\nu_z = \frac{z_2 + z_0}{2z_1}$$

with the incertitude $\nu_z \, \delta\nu_z = \frac{\gamma}{\pi^2} \frac{\delta_z}{z}$

For example, a wire 0.1 mm in diameter plotted to a quarter of its diameter gives a δz of 0.05 mm; this gives ν_z within 10% around 0.1 and 5% around 0.2, which is a desirable figure. But this method makes the determination of ν_z under 0.03 difficult.

Experimental Results

The experimental setup is shown in Fig. 6. The typical field measurements shown in Fig. 7 were obtained with pole pieces made with the theoretical exact shape corresponding to r = θ and an angular extension of 40°.

The average field law is modified by saturation effects when the central field is changed, which gives a wide range of variation of the field index k. The lower curves in Fig. 7 show how an unstable region appears, when k is increased. The measured ν_z is lower than the computed value. The same plot made with non-spiraled pole pieces gives curves of the same shape, but the unstable region is much wider.

In conclusion, this is a way of getting, in a rather short time, a very good approach to a desired magnetic field shape and of having the accurate computation apply to an already good approximation.

II - ACCELERATING SYSTEM OF THE GRENOBLE ISOCHRONOUS CYCLOTRON

To satisfy the specified requirements with good reliability it is highly desirable to avoid sliding contacts for tuning the RF cavity. Capacity tuning by movable panels is preferred.

Although a 3:1 variation in frequency is possible, it leads to complex mechanical systems. It was decided to use two opposite cavities, connected to a dee of 90° aperture, see Fig. 8. The dee-to-ground capacity is somewhat reduced; this makes it easier to get to the high frequency side (21 - 23 Mc/s).

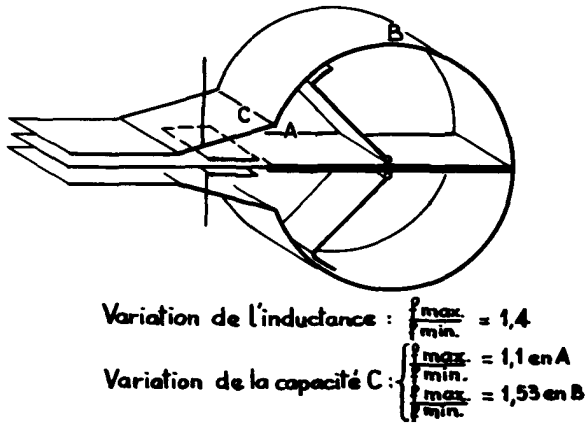

Fig. 9 A simple but limited tuning scheme.

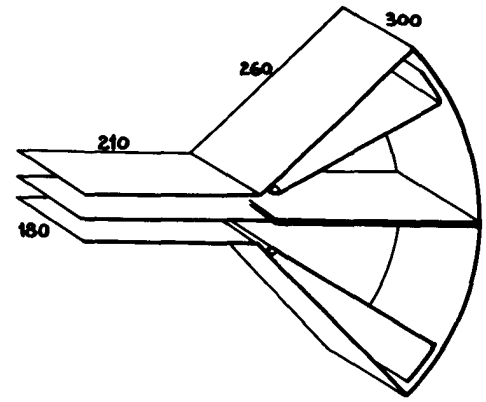

Fig. 10 A tuning scheme with interrupted frequency range.

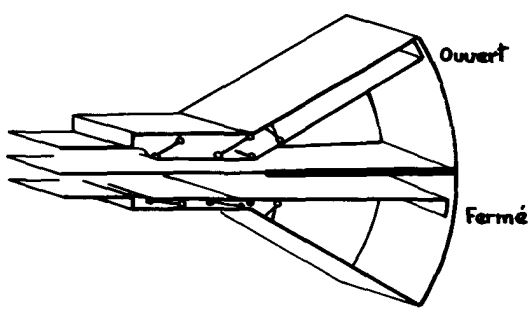

Fig. 11 Best tuning scheme tested.

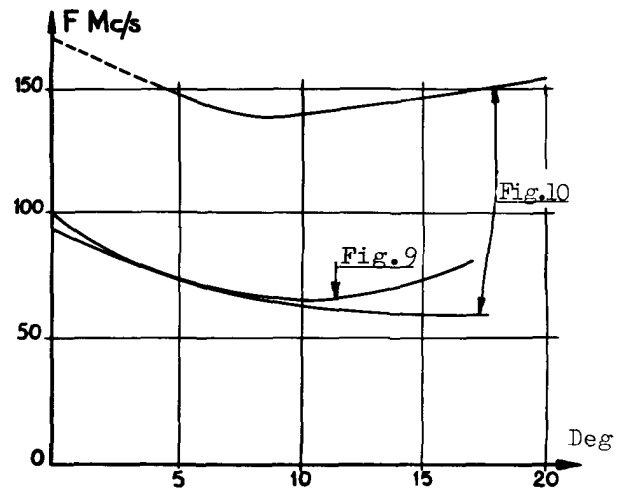

Fig. 12 Performance of tuning schemes.

If this arrangement is compared with the single 180° dee, for the same RF input power, the energy gain per turn can be roughly $\sqrt{2}$ greater for the ions at the fundamental frequency, (see curves 1 and 2 in Fig. 2) and twice for the ions on the second harmonic (curves 3, 4 and 5 of Fig. 2).

Although this system will not be installed at the start, it will leave the possibility of continuous variation of frequency throughout the whole bandwidth or part of it, during operation of the machine, giving the possibility of tuning the output energy. Such a system presents a certain number of difficulties, as indicated by B.H. Smith from Berkeley, but it seems worthwhile enough to try to find a correct solution.

Some effort has been given to obtain a very simple mechanical design. Figs. 9, 10 and 11 show a few of the various shapes which have been considered. The corresponding performance for two shapes is shown in Fig. 12.

The shape of Fig. 9 is rather simple, but does not give the desired factor. The shape of Fig. 10 shows a large gap in the frequency band due to resonances in the volumes behind the panels. The best result is given by the design of Fig. 11, where

the panels act at the same time and in opposition on the reactance and on the capacitive part of the resonator.

To avoid the spurious modes which make frequency adjustment difficult, the two cavities will be fed in parallel from a power amplifier with an independent master oscillator, see Fig. 8.

DISCUSSION

DE KRUIFF : What kind of wire do you use, and what current?

LEBOUTET : Copper wire 0.1 to 0.2 mm dia. with currents between 600 mA and 2 A., high enough so that the wire is hot and has no rigidity.

LAWSON : How does your electron model for axial injection compare with the Birmingham scheme?

LEBOUTET : The electron model represents, at full scale, the centre of the machine. It is not yet equipped with RF acceleration so that we do not have the first turns. The first trajectory is roughly 5 cm in diameter; we get out of the difficulties of focusing in central region rather quickly. Our scheme has two nice features, the focusing of the beam is rather good and the trajectories are large right at the beginning.

REISER : How did you arrive at the figure of 30 to 40° for the phase acceptance?

LEBOUTET : Just by rough estimates from hand computation.

WATERTON : What is your dee voltage?

LEBOUTET : The assumed dee voltage is 50 kV, to operate either in phase or in opposite phase to be able to handle all the particles

LAPOSTOLLE : Why didn't you use the hodoscope electronic system to measure the vertical motion?

LEBOUTET : It's more cumbersome than using a telescope. The telescope is very practical in the region where Q_z is of the order of magnitude of 0.2 the telescope is all right. In difficult areas we use the more accurate electromagnetic technique.

POWELL : Have you made any estimates of current that your axial injection system will handle?

LEBOUTET : Not yet. We think we can focus from 1 to 4 mA from the source. The deflector has good efficiency; the loss in the grid is about 20%.